PP-17WH
User Manual

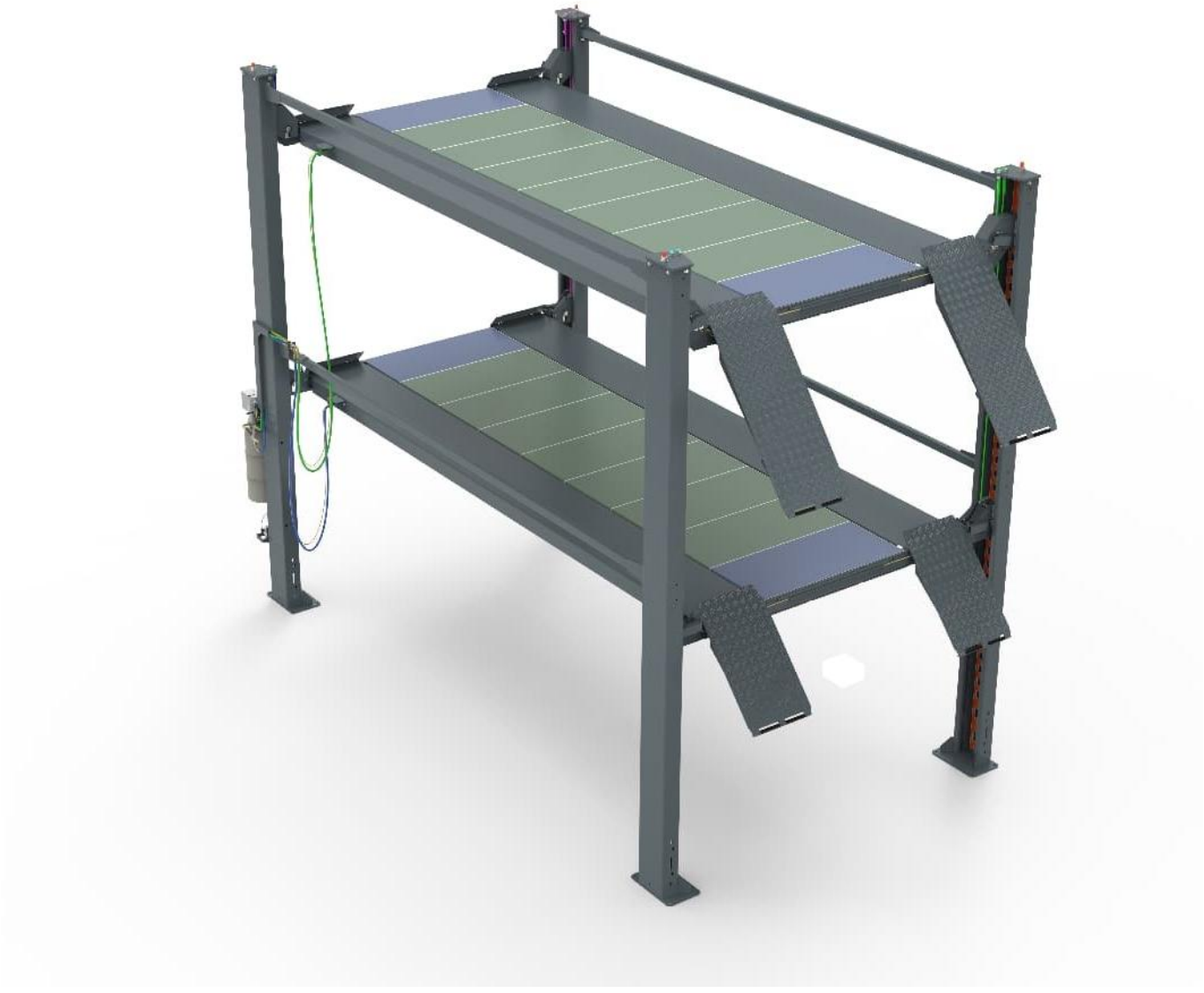

Special Notes

▲ Any damage to the equipment caused during transportation shall be claimed by the purchaser from the carrier (freight company).

▲ Safety has been considered in the design and manufacturing of this product. However, proper training and careful operation will further improve safety. **Do not operate or repair this equipment before reading this manual.**

▲ Confirm the required power supply, current rating, and other specifications on the motor nameplate. **Wiring/connection must be carried out by a qualified electrician.**

▲ To ensure personal safety and prevent electric shock, make sure **all grounding points are properly and reliably grounded.**

▲ The Company reserves the right to make partial structural improvements to the product **without prior notice**. The Company has **no obligation** to update products previously sold.

▲ Please carefully read and complete the **Warranty Card** on the last page of this manual, and return it to the distributor and the Company for record. This will serve as one of the references for after-sales service. Otherwise, it will be deemed that you have **waived the right** to receive corresponding services, and you shall bear all related responsibilities.

▲ Do not lift loads exceeding the rated capacity of the equipment: **Upper floor: 3600 kg (8000 lbs); Lower floor: 4000 kg (9,000 lbs)**

▲ Please read and comply with all warning labels on the equipment.

Table of Contents

1. Main Performance Features of the Equipment 4
2. Basic Technical Parameters 5
3. Overall Dimensions and Foundation Layout Drawing 6
4. Shipping Parts List 8
5. Tools Required for Installation 10
6. Equipment Installation 11
7. Hydraulic System and Electrical Components 38
8. Troubleshooting 42
9. Maintenance and Inspection 43
10. Detailed Assembly Components 44

1. Main Performance Features of the Equipment

● Combines **inspection, maintenance, and parking functions** in one unit, with an aesthetically pleasing appearance.

● Driven by a **hydraulic cylinder system** and synchronized by **steel wire ropes**, ensuring quiet operation and a low-noise working environment.

● Equipped with a **pneumatic safety locking system**, allowing the platform to be locked at any required height for operation. Safe and reliable.

● The platform level can be adjusted at the locking position to ensure accurate leveling for inspection, maintenance, and parking requirements.

2.Basic Technical Parameters

Model	QL3STACK	Clear Distance Between Lower Platforms – 19	47-3/16″ (1199MM)
Upper Floor Rated Capacity	3.6T	Lower Platform Length – 20	187-11/16″ (4768MM)
Lower Floor Rated Capacity	4T	Minimum Height of Lower Platform – 21	4-7/16″ (113MM)
Upper Platform Width – 1	19-1/16″ (484MM)	Minimum Height of Upper Platform – 22	10-13/16″ (274MM)
Clear Distance Between Upper Platforms – 2	41″ (1041MM)	Height of Lower Column Cross Beam – 23	83-7/8″ (2130MM)
Clear Distance Between Upper Platforms – 3	47-3/16″ (1199MM)	Height of Upper Column Cross Beam – 24	159-5/8″ (4054MM)
Upper Platform Length – 4	187-11/16″ (4768MM)	Overall Length of Lower Floor – 25	225-1/4″ (5721.65MM)
Overall Height – 5	165-11/16″ (4208MM)	Overall Length of Upper Floor – 26	241-13/16″ (6141.52MM)
Maximum Locking Height of Lower Platform – 6	67-7/16″ (1713MM)	Minimum Longitudinal Distance Between Columns – 27	101-9/16″ (2580MM)
Maximum Locking Height of Upper Platform – 7	75-5/16″ (1913MM)	Maximum Longitudinal Distance Between Columns – 28	111-13/16″ (2840MM)
Minimum Locking Height Between Upper and Lower Platforms – 8	71-3/16″ (1808MM)	Minimum Longitudinal Distance Between Base Plates – 29	91-13/16″ (2332MM)
Minimum Clearance Height Between Upper and Lower Platforms – 9	68-1/16″ (1729MM)	Maximum Longitudinal Distance Between Base Plates – 30	113-1/4″ (2876MM)
Maximum Lifting Height of Upper Platform – 10	150-15/16″ (3834MM)	Wide Runway Plate	46-1/4″ (1174MM)
Minimum Transverse Distance Between Base Plates – 11	169-5/8″ (4308MM)	Wide Runway Plate	46-1/4″ (1174MM)
Minimum Transverse Distance Between Columns – 12	176-11/16″ (4488MM)	Narrow Runway Plate	40″ (1016MM)
Maximum Transverse Distance Between Columns – 13	195-9/16″ (4968MM)	Narrow Runway Plate	40″ (1016MM)
Maximum Transverse Distance Between Base Plates – 14	201-7/8″ (5128MM)	Runway Plate Height	4-1/2″ (115MM)
Overall Length (Lower Floor Lifted) – 15	224-1/2(5701.65MM)	Platform Height	4-3/4″ (120MM)
Overall Length (Upper Floor Lifted) – 16	241″ (6121.52MM)	Hook	2-3/8″ (60MM)
Lower Platform Width – 17	19-1/16″ (484MM)	Wheel Stop Plate	8-9/16″ (218MM)
Clear Distance Between Lower Platforms – 18	41″ (1041MM)	Power Supply (Customizable)	240V/50HZ

3.Overall Dimensions and Foundation Layout Drawing

Dimensions

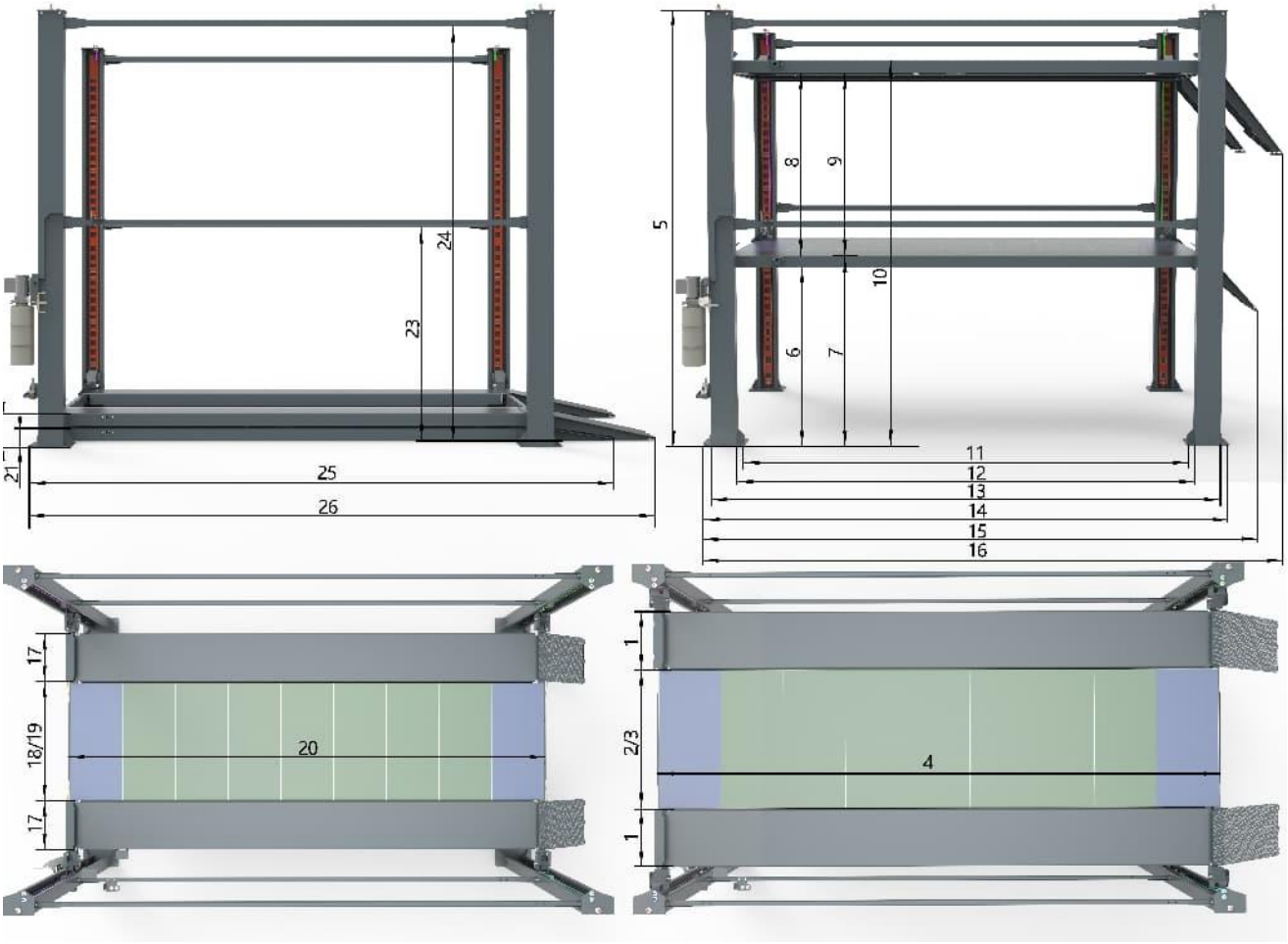



Foundation Map

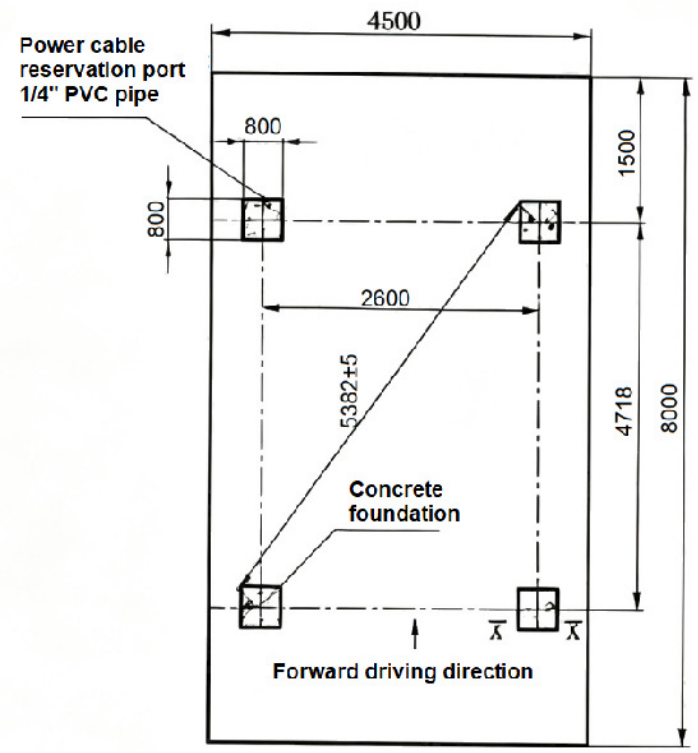

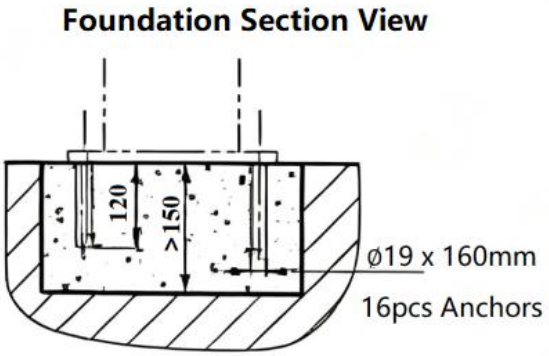

Technical Requirements

1. The working area must be no less than 4500 ◊ 8000 (mm ◊ mm).
2. The thickness of the concrete foundation must be no less than 110 mm. The flatness tolerance of the foundation surface shall not exceed 5 mm, and the compressive strength of the foundation shall be no less than 19.6 MPa.
3. Ensure the diagonal error does not exceed 5 mm.
4. The reserved power cable specification shall not be less than RVV4 ◊ 1.5, with a length of no less than 1000 mm from the outlet.

4. **Shipping Parts List**

Shipping Parts List (F)			
Serial-F	Name	Specification	Quantity
F-1	Main Column	4180-250-130	1
F-2	Secondary Column	4180-250-130	3
F-3	Safety Lock Plate Assembly	4224-101-10	4
F-4	Column Cross Beam	4468-60-40	4
F-5	Power Unit Mounting Bracket	175-175-5	1
F-6	Column Hydraulic Hose Protective Cover	595-245-30	1
F-7	Unlocking Valve Bracket	93.5-67-299.5	1
F-8	Hydraulic Hose Connection Bracket	119-129.5-147	1
F-9	Oil-Water Separator Protective Bracket	200-110-30	1
F-10	Column Top Cover – Left	262-200-16	2
F-11	Column Top Cover – Right	262-200-16	2
F-12	Lower Floor Main Platform Assembly	4768-484-120	1
F-13	Lower Floor Secondary Platform Assembly	4768-484-120	1
F-14	Upper Floor Main Platform Assembly	4768-484-120	1
F-15	Upper Floor Secondary Platform Assembly	4768-484-120	1
F-16	Lower Floor Cross Beam Assembly	2760-65-245	2
F-17	Upper Floor Cross Beam Assembly	2760-65-315	2
F-18	Lower Floor Drive-On Ramp Assembly	879-484-5	2
F-19	Upper Floor Drive-On Ramp Assembly	1317-484-5	2
F-20	Ramp Connection Pin	¢ 16-350/340	4
F-21	Wheel Stop (Pre-Assembled with Tension Spring)	484-236-5	4
F-22	Hook Assembly	594-87.5-5	8
F-23	Wide Movable Runway Plate	1174-529-115	4
F-24	Wide Movable Runway Plate	1174-529-115	14
F-25	Narrow Movable Runway Plate	1016-529-115	4
F-26	Narrow Movable Runway Plate	1016-529-115	14
F-27	Power Unit		1
F-28	Spare Parts Package		1



Applicable to Lower Floor

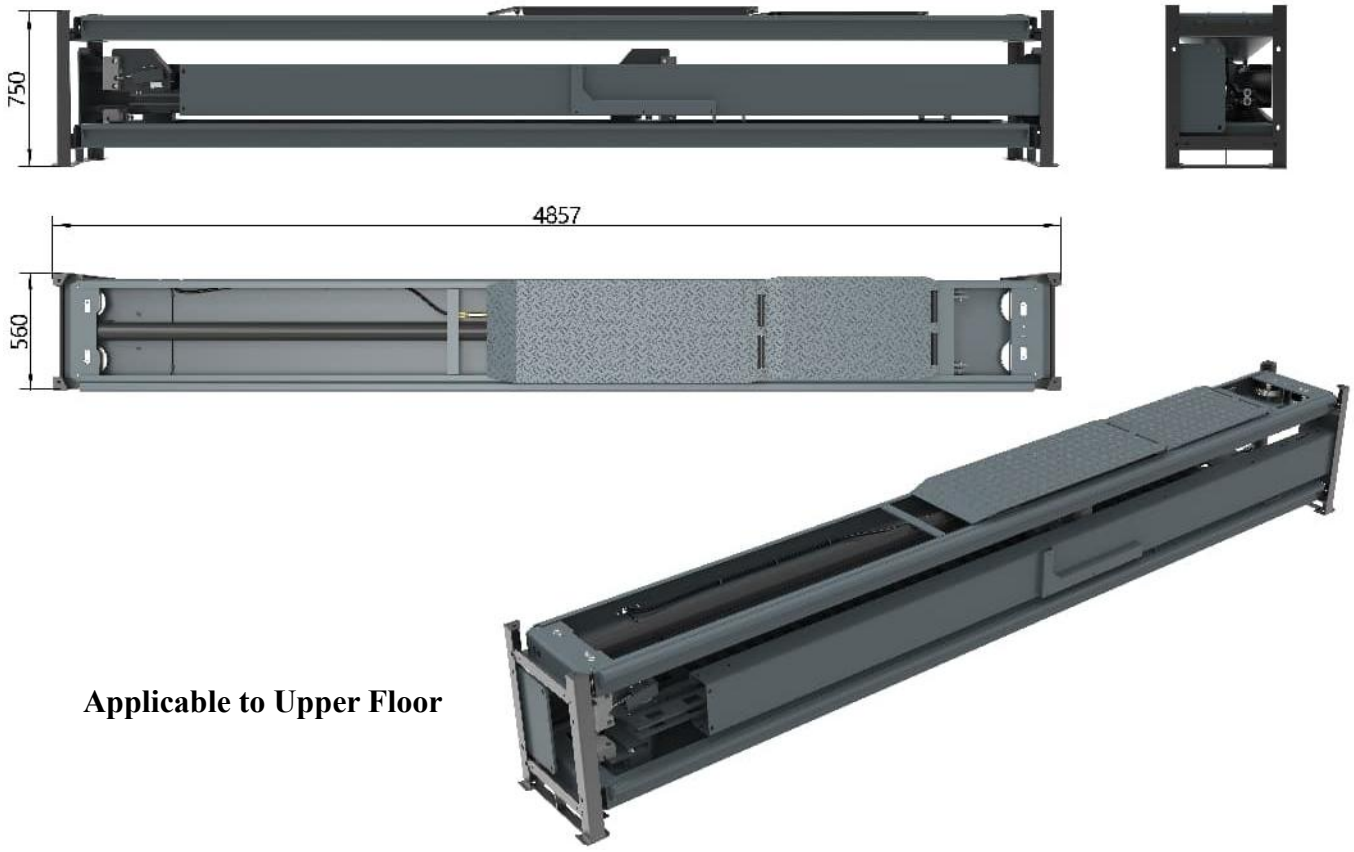

Applicable to Upper Floor

5. Tools Required for Installation

1. Impact Drill and Drill Bits 2. Hammers (Iron and Rubber) 3. Spirit Level







4. Carpenter's Chalk Line 5. Flat Lifting Sling (3 m, 2 Ton Capacity) 6. Forklift (2 Ton Capacity)







7. 58-Piece Multifunctional Installation Tool Kit



1 pc Plastic Case Steel Measuring Tape 5mx19mm
23 pcs Metric & Imperial Feeler Gauge Set 0.02–1.0mm
1 pc Steel Ruler 300mm
1 pc Fiberglass Handle Ball Peen Hammer 1 lb.

14 pcs 10 mm Drive Hex Socket Set (6, 7, 8, 9, 10, 11, 12, 13, 14, 15, 16, 17, 18, 19 mm)
1 pc 10 mm Drive Quick-Release Ratchet Wrench (8")
1 pc 10 mm Drive Universal Joint
1 pc Adjustable Wrench (10")
3 pcs Fully Polished Combination Wrenches (13, 14, 17 mm)
12 pcs Fully Polished Combination Wrenches (8, 9, 10, 11, 12, 13, 14, 15, 16, 17, 18, 19 mm)
9 pcs Extra-Long Ball-End Hex Key Set (1.5, 2, 2.5, 3, 4, 5, 6, 8, 10 mm)
1 pc Combination Pliers (8")
1 pc Long Nose Pliers (6")
1 pc German Type External Circlip Pliers- Straight (5")
1 pc German Type Internal Circlip Pliers- Straight (5")
3 pcs A-Series Flat (slotted) Screwdrivers (3.2× 75, 5× 100, 6×38 mm)
4 pcs A-Series Phillips Screwdrivers (#0×75, #1×100, #2×38. #2×150 mm)
1 pc Magnetic Pick-Up Tool (380 mm)
1 pc Plastic- Handle Utility Knife (8-Segment Blade, 18 ×100 mm)

6. Equipment Installation

Step 1: Site Selection

1. The installation location of the lift shall comply with the overall layout plan of the site. Ensure that sufficient space is reserved according to the required installation dimensions. (Refer to the dimensional drawing and foundation layout drawing.)
2. Ensure that the ground surface is free from defects. The concrete foundation strength must reach **3000 psi (2.1 kg/mm²)** or the compressive strength shall not be less than **19.6 MPa**.
3. According to the overall dimensions and foundation layout drawing, confirm the installation position and mark the layout lines.
   (Use a chalk line and measuring tape.)
4. Open the packaging and inspect all components for any damage during transportation.
   (Use a forklift and tool kit.)

Use a forklift to move the packaged unit to an open working area. Use a utility knife to remove the outer packaging materials (stretch film and cardboard). Remove all accessories placed on the main platform and place them in an open area.

Inspect the hydraulic line connections on the main platform assembly and install the fittings at the designated connection points. Check the installation position of the steel wire ropes.

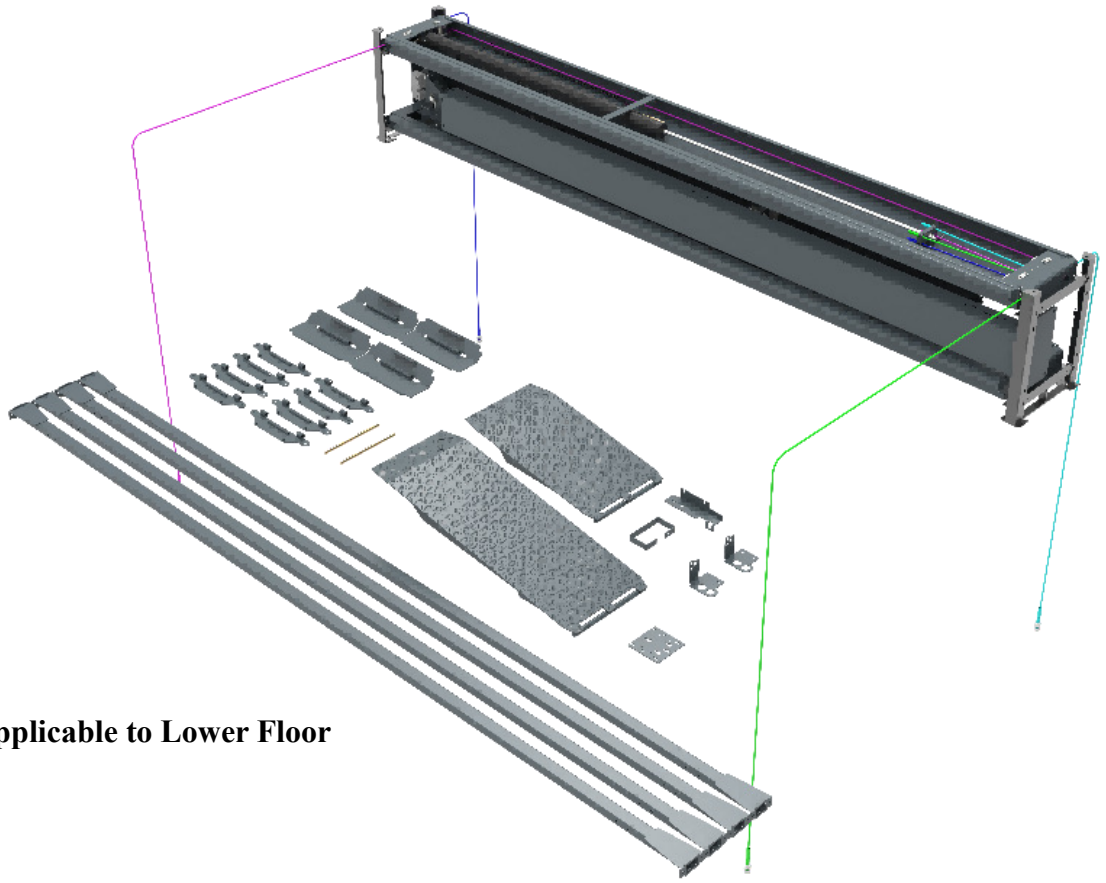

Applicable to Lower Floor

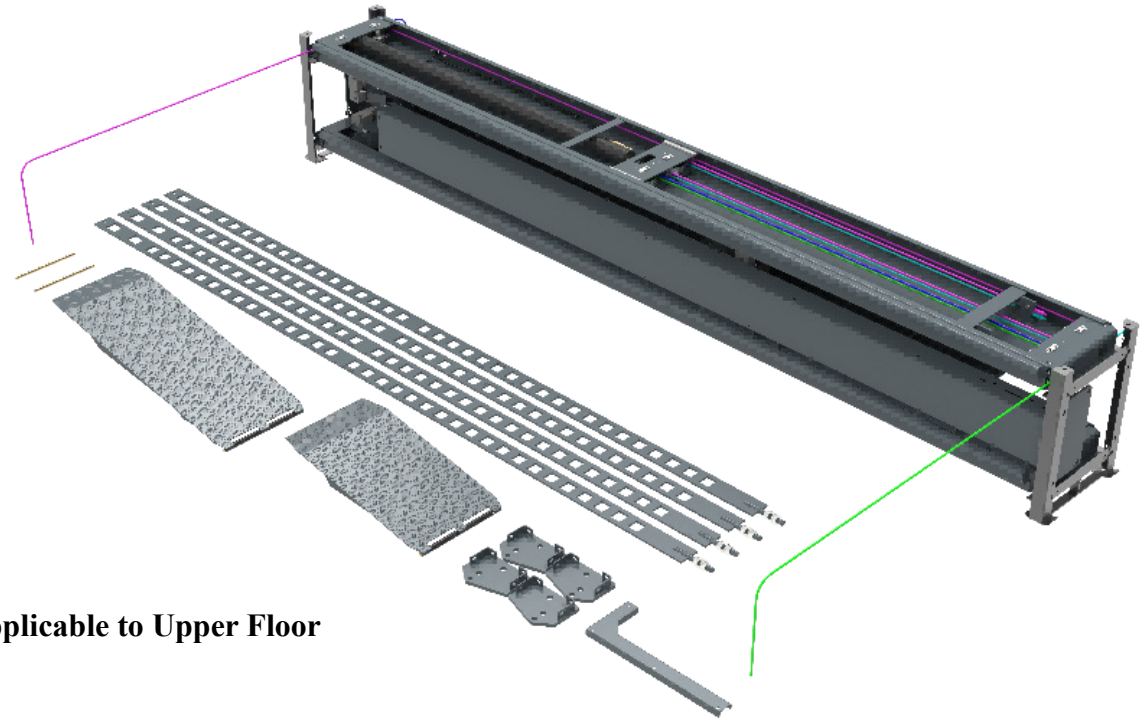

Applicable to Upper Floor

5. After confirming that the hydraulic lines and steel wire ropes are properly installed, use a wrench to remove the bolts securing the shipping frame. Use a forklift to lift the main platform assembly and place wooden blocks on the ground as supports. Lower the platform onto the wooden blocks. Using flat lifting slings turn the main platform assembly over with the forklift. Remove the remaining components. The cross beams and platforms must be placed on wooden blocks, ensuring sufficient space is reserved for forklift access. Arrange all components neatly in an open area and begin checking them against the shipping parts list. Verify all items contained in the spare parts package.

Shipping Parts List (F)			
Serial-F	Name	Specification/Standard	Quantity
F-1	Main Column	4180-250-130	1
F-2	Secondary Column	4180-250-130	3
F-3	Safety Lock Plate Assembly	4224-101-10	4
F-4	Column Cross Beam	4468-60-40	4
F-5	Power Unit Mounting Bracket	175-175-5	1
F-6	Column Hydraulic Hose Protective Cover	595-245-30	1
F-7	Unlocking Valve Bracket	93.5-67-299.5	1
F-8	Hydraulic Hose Connection Bracket	119-129.5-147	1
F-9	Oil-Water Separator Protective Bracket	200-110-30	1
F-10	Column Top Cover – Left	262-200-16	2
F-11	Column Top Cover – Right	262-200-16	2
F-12	Lower Floor Main Platform Assembly	4768-484-120	1
F-13	Lower Floor Secondary Platform Assembly	4768-484-120	1
F-14	Upper Floor Main Platform Assembly	4768-484-120	1
F-15	Upper Floor Secondary Platform Assembly	4768-484-120	1
F-16	Lower Floor Cross Beam Assembly	2760-65-245	2
F-17	Upper Floor Cross Beam Assembly	2760-65-315	2
F-18	Lower Floor l Drive-On Ramp Assembly	879-484-5	2
F-19	Upper Floor Drive-On Ramp Assembly	1317-484-5	2
F-20	Ramp Connection Pin	¢ 16-350/340	4
F-21	Wheel Stop (Pre-Assembled with Tension Spring)	484-236-5	4
F-22	Hook Assembly	594-87.5-5	8
F-23	Wide Movable Runway Infill Plate	1174-529-115	4
F-24	Wide Movable Runway Infill Plate	1174-529-115	14
F-25	Narrow Movable Runway Infill Plate	1016-529-115	4

F-26	Narrow Movable Runway Infill Plate	1016-529-115	14
F-27	Power Unit		1
F-28	Spare Parts Package		1

Notes: F-23,F-24,F-25, F-26 are optional parts

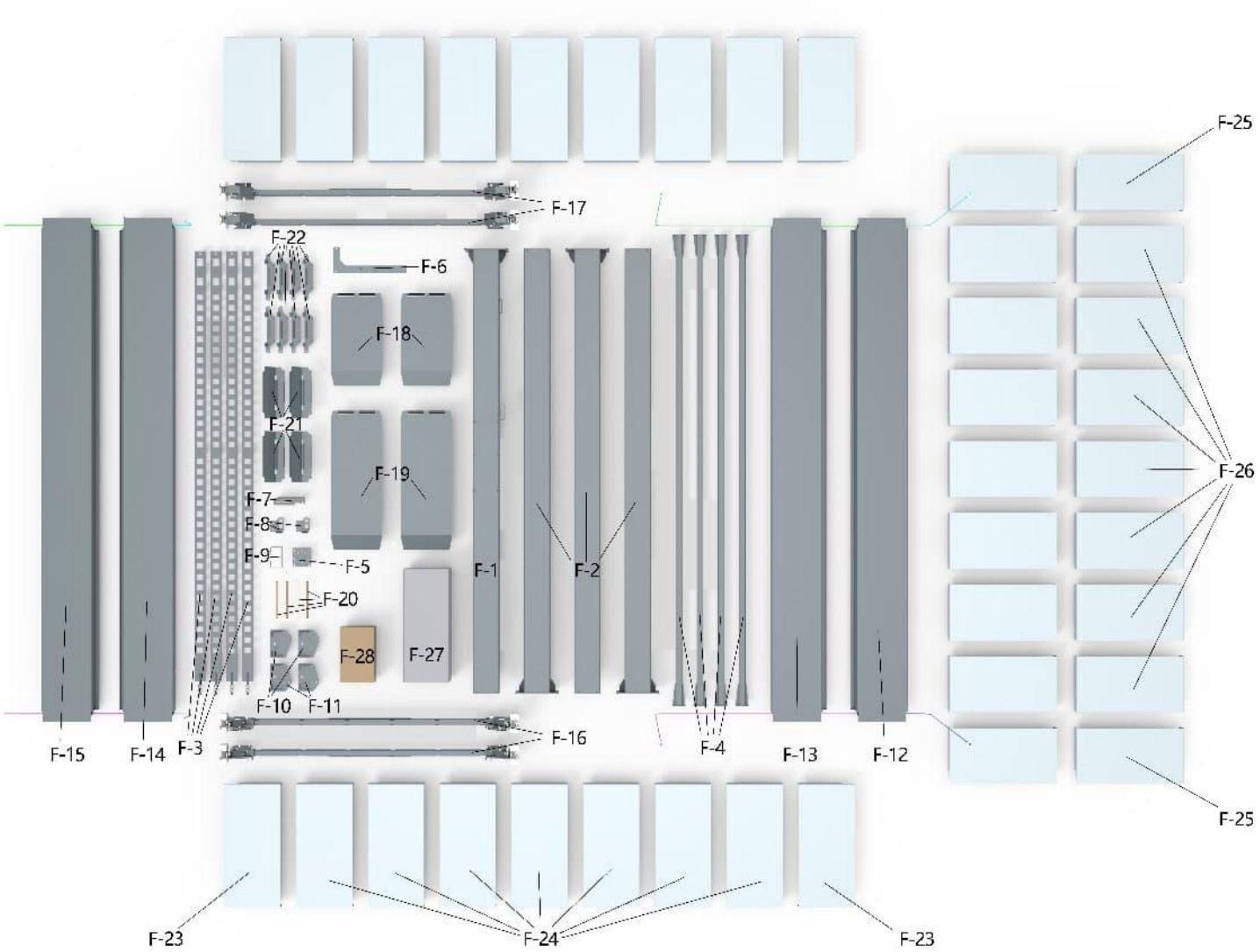

Spare Parts Package				
Serial-C	Name	Specification	Quantity	Notes(Installation location)
C-1	M12－30 Hex Head Bolt	GB/T5781C（4.8）	36	Column Cover Plate / Safety Lock Plate / Column Cross Beam
C-2	¢ 12 Flat Washer	GB 95-85-C	68	Column Cover Plate / Safety Lock Plate / Column Cross Beam
C-3	¢ 12 Spring Washer	GB 93-87	36	Column Cover Plate / Safety Lock Plate / Column Cross Beam

C-4	M12 Nut	GB/T41-86（4.8）	32	Column Cover Plate
C-5	M8－35 Hex Head Bolt	GB/T5781C（4.8）	4	Power Unit
C-6	¢ 8 Flat Washer	GB 95-85-C	8	Power Unit
C-7	¢ 8 Spring Washer	GB 93-87	4	Power Unit
C-8	M8 Nut	GB/T41-86（4.8）	4	Power Unit
C-9	M8－15 Socket Head Cap Screw (Button Head)	GB/T70.2-2000	2	Power Unit Mounting Bracket
C-10	¢ 8 Flat Washer	GB 95-85-C	2	Power Unit Mounting Bracket
C-11	¢ 8 Spring Washer	GB 93-87	2	Power Unit Mounting Bracket
C-12	Rubber Vibration Pad	160-47-5	2	Power Unit – Steel Type
C-13	Concrete Anchor Bolt (Expansion Bolt)	M19-160mm	16	Column Base Plate
C-14	M4－35 Socket Head Cap Screw	GB 818-85 H	2	NPT1/4 Hydraulic Directional Valve
C-15	¢ 4 Flat Washer	GB 95-85-C	4	NPT1/4 Hydraulic Directional Valve
C-16	¢ 4 Spring Washer	GB 93-87	2	NPT1/4 Hydraulic Directional Valve
C-17	M4 Nut	GB/T41-86（4.8）	2	NPT1/4 Hydraulic Directional Valve
C-18	Hydraulic Hose	Straight × 90° Elbow Hose (L = 185 mm) – SAE 9/16	1	Hydraulic Line from Power Unit to Directional Valve
C-19	Hydraulic Hose	Straight × 90° Elbow Hose (L = 1345 mm) – SAE 9/16	2	Directional Valve to 130 mm Straight Adapter Fitting
C-20	Hydraulic Hose	Straight × 90° Elbow Hose (L = 1255 mm) – SAE 9/16	2	Directional Valve to 80 mm Straight Adapter Fitting
C-21	Lower Floor Hydraulic Hose Fireproof Sleeve	Expanded Length 145----L=2530mm	1	Wrapped Hydraulic Hose for Lower Platform (4090 mm)
C-22	Upper Floor Hydraulic Hose Fireproof Sleeve	Expanded Length 145----L=2420mm	1	Wrapped Hydraulic Hose for Upper Platform (4000 mm)
C-23	Hydraulic Hose Fireproof Sleeve	Expanded Length 145----L=300mm	1	Wrapped Hydraulic Hose from Power Unit to Directional Valve (185 mm)
C-24	Manual Hydraulic Three-Way Ball Valve		1	
C-25	Fitting for Manual Hydraulic Three-Way Ball Valve	SAE 9/16 Flat Seat – 9/16 Male Cone	1	Power Unit Fitting
C-26	90° Elbow Fitting for Manual Hydraulic Three-Way Ball Valve	9/16 Male Cone--NPT1/4	2	Manual Hydraulic Three-Way Ball Valve with Hose Connection (1345 / 1255 mm)
C-27	Hydraulic Hose Adapter (Double Nut, Double	Double-Ended 9/16 Male Cone Fully	1	Fitting for Lower Platform 4090 mm Hose

	Washer)	Threaded Stud – 80		
C-28	Hydraulic Hose Adapter (Double Nut, Double Washer)	Double-Ended 9/16 Male Cone Fully Threaded Stud – 130 mm	1	Fitting for Upper Platform 4000 mm Hose
C-29	Power Unit Sealing Gasket	¢ 14 Copper Washer	2	Power Unit
C-30	M6－45 Socket Head Cap Screw	GB 818-85 H	4	Hydraulic Hose Protective Cover
C-31	¢ 6 Flat Washer	GB 95-85-C	4	Hydraulic Hose Protective Cover
C-32	¢ 6 Spring Washer	GB 93-87	4	Hydraulic Hose Protective Cover
C-33	M8－75 Socket Head Cap Screw	GB/T5781C（4.8）	2	Corrugated Hose Bracket
C-34	¢ 8 Flat Washer	GB 95-85-C	4	Corrugated Hose Bracket
C-35	¢ 8 Spring Washer	GB 93-87	2	Corrugated Hose Bracket
C-36	M8 Nut	GB/T41-86（4.8）	2	Corrugated Hose Bracket
C-37	Oil-Water Separator	AL-3000-03	1	Unlock
C-38	Air Filter Fitting (3/8") – For ¢ 8 Air Hose	PL8-03（90° Elbow Fitting）	1	Air Inlet – Oil-Water Separator
C-39	Air Filter Fitting (3/8") – For ¢ 6 Air Hose	PL6-03（90° Elbow Fitting）	1	Air Outlet – Oil-Water Separator
C-40	M6－15 Phillips Pan Head Screw	GB 818-85 H	2	AL-3000-03 Oil-Water Separator
C-41	¢ 6 Flat Washer	GB 95-85-C	2	AL-3000-03 Oil-Water Separator
C-42	¢ 6 Spring Washer	GB 93-87	2	AL-3000-03 Oil-Water Separator
C-43	¢ 6 Air Hose	PU6-4---L=1500mm	1	Air Line from Oil-Water Separator to Unlocking Valve
C-44	¢ 6 Air Hose	PU6-4---L=5500mm	2	Unlocking Valve to Upper and Lower Platforms
C-45	3-Position 5-Way Spring Return Pneumatic Valve	4H230E-08(0.1--0.8 mpa)	1	Unlock
C-46	90° Elbow Air Fitting for 3-Position 5-Way Pneumatic Valve (For Ø6 Air Hose)	PL6-02	3	4H230E-08(0.1--0.8mpa) 3-Position 5-Way Spring Return Pneumatic Valve
C-47	3-position 5-way self-resetting exhaust valve exhaust muffler	SLM-01	2	4H230E-08(0.1--0.8mpa) 3-Position 5-Way Spring Return Pneumatic Valve
C-48	Grease Nipple (Grease Fitting)	M10--1	18	Steel Wire Rope Pulley Shaft Lubrication
C-49	M8－25 Hex Head Bolt	GB/T5781C（4.8）	4	Platform Fireproof Cloth Bracket
C-50	¢ 8 Flat Washer	GB 95-85-C	8	Platform Fireproof Cloth Bracket
C-51	¢ 8 Spring Washer	GB 93-87	4	Platform Fireproof Cloth Bracket
C-52	M8 Nut	GB/T41-86（4.8）	4	Platform Fireproof Cloth Bracket
C-53	M12－80 Hex Head Bolt (Partially Threaded)	GB/T5781C（4.8）	16	Platform Cross Beam Connection
C-54	¢ 12 Flat Washer	GB 95-85-C	32	Platform Cross Beam Connection

C-55	¢ 12 Spring Washer	GB 93-87	16	Platform Cross Beam Connection
C-56	M12 Nut	GB/T41-86（4.8）	16	Platform Cross Beam Connection
C-57	Brake Block		4	Platform
C-58	Slotted Round Flat Washer		20	Column
C-59	Cable Tie		10	Air Hose and Hydraulic Hose



Step 2: Main Column Assembly (F-1) and Secondary Column Assembly (F-2)

Lay down the main column assembly (F-1) and secondary column assembly (F-2) horizontally.

Use wooden support blocks to elevate them off the ground.

Position the assemblies according to the layout shown in the drawing.

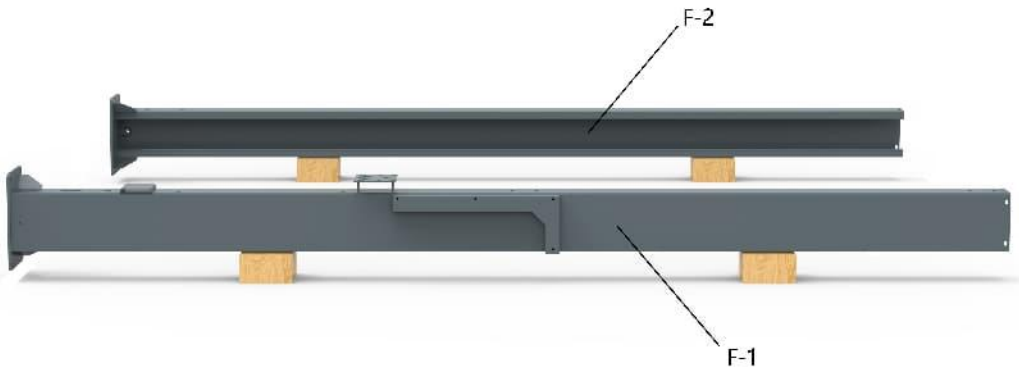

Step 3: Positioning the Cross Beam Assemblies

Align the inner sides of the column assemblies in pairs, ensuring they face inward and are properly aligned.

Using a forklift, position the **Lower Floor Cross Beam Assembly (F-16)** and the **Upper Floor Cross Beam Assembly (F-17)** according to the layout shown in the drawing, and prepare for installation.

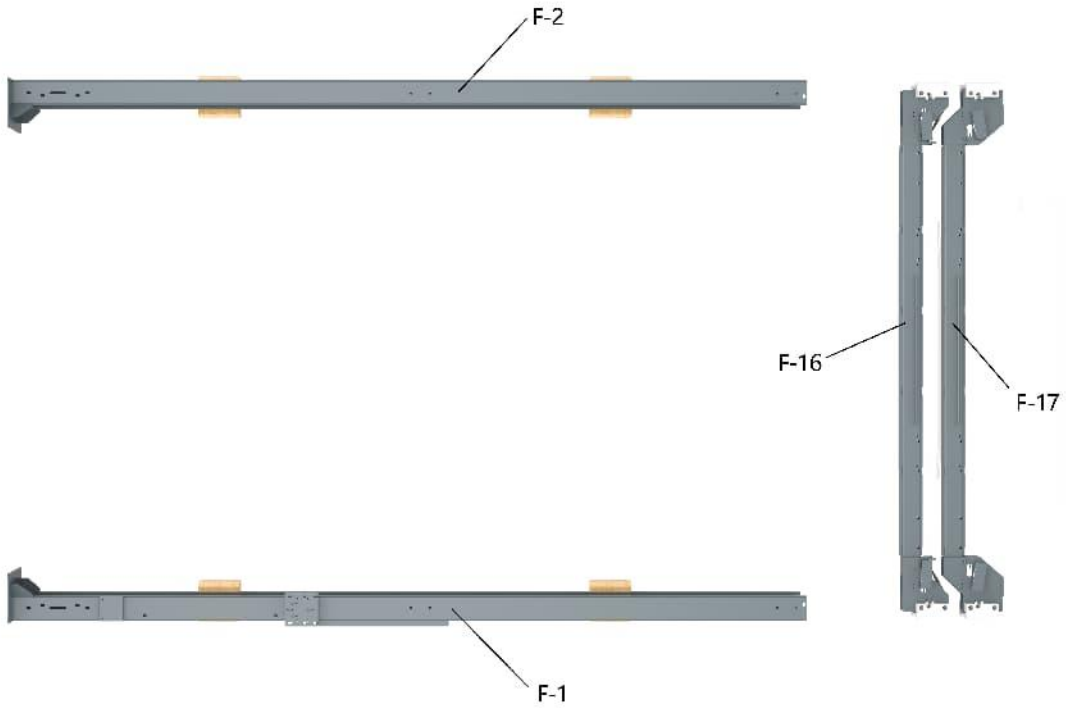

Step 4: Installing the Cross Beam Assemblies

First, position the **Lower Floor Cross Beam Assembly (F-16)** into the inner slots of the columns.

During placement, maintain a certain clearance between the cross beam assembly and the column base plates.

Then position the **Upper Floor Cross Beam Assembly (F-17)** into place.

During installation, ensure that a proper clearance is maintained between the upper cross beam assembly and the lower cross beam assembly.

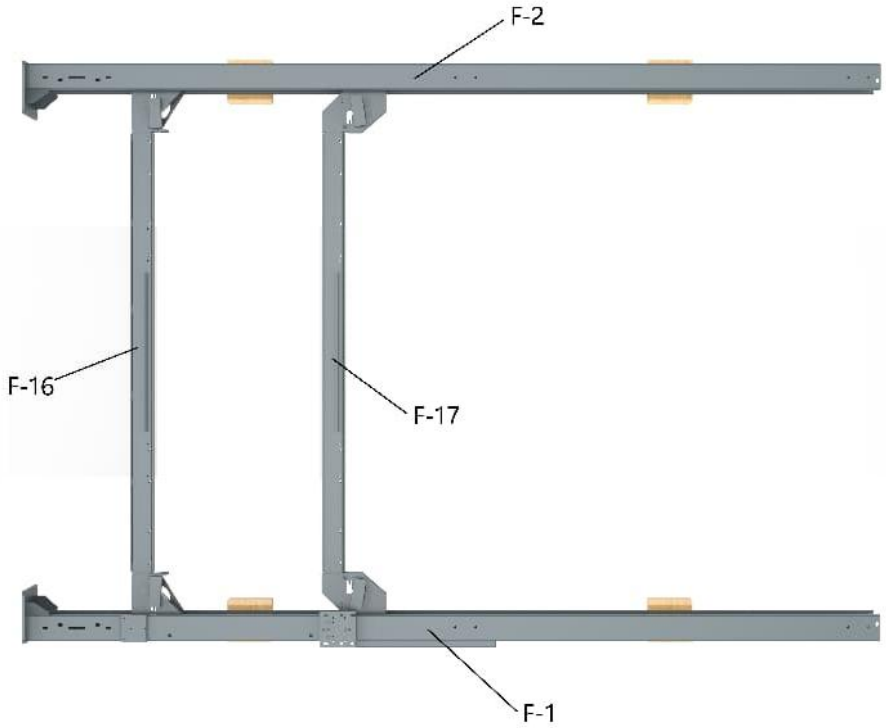

Step 5: Install the Safety Lock Plate Assembly

Install the **Safety Lock Plate Assembly (F-3)**.

Secure it using:

- **M12×30 Hex Head Bolts (C-1)**
- **Ø12 Flat Washers (C-2)**
- **Ø12 Spring Washers (C-3)**

Tighten the fasteners using the open-end wrench and adjustable wrench provided in the tool kit.

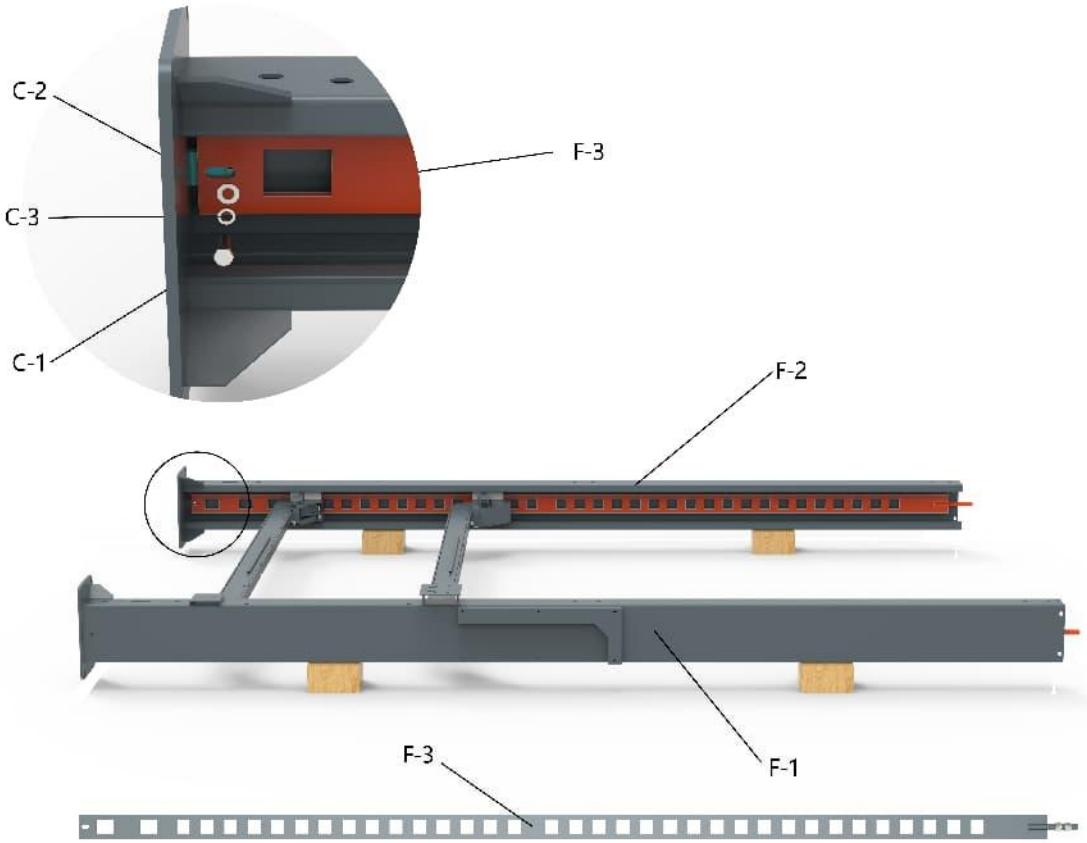

Step 6: Install the Column Top Covers

Install the **Column Top Covers (F-10, F-11)**.

Secure them using:

- **M12×30 Hex Head Bolts (C-1)**
- **Ø12 Flat Washers (C-2)**
- **Ø12 Spring Washers (C-3)**
- **M12 Nuts (C-4)**

Tighten the fasteners using the open-end wrench and adjustable wrench rovided in the tool kit.

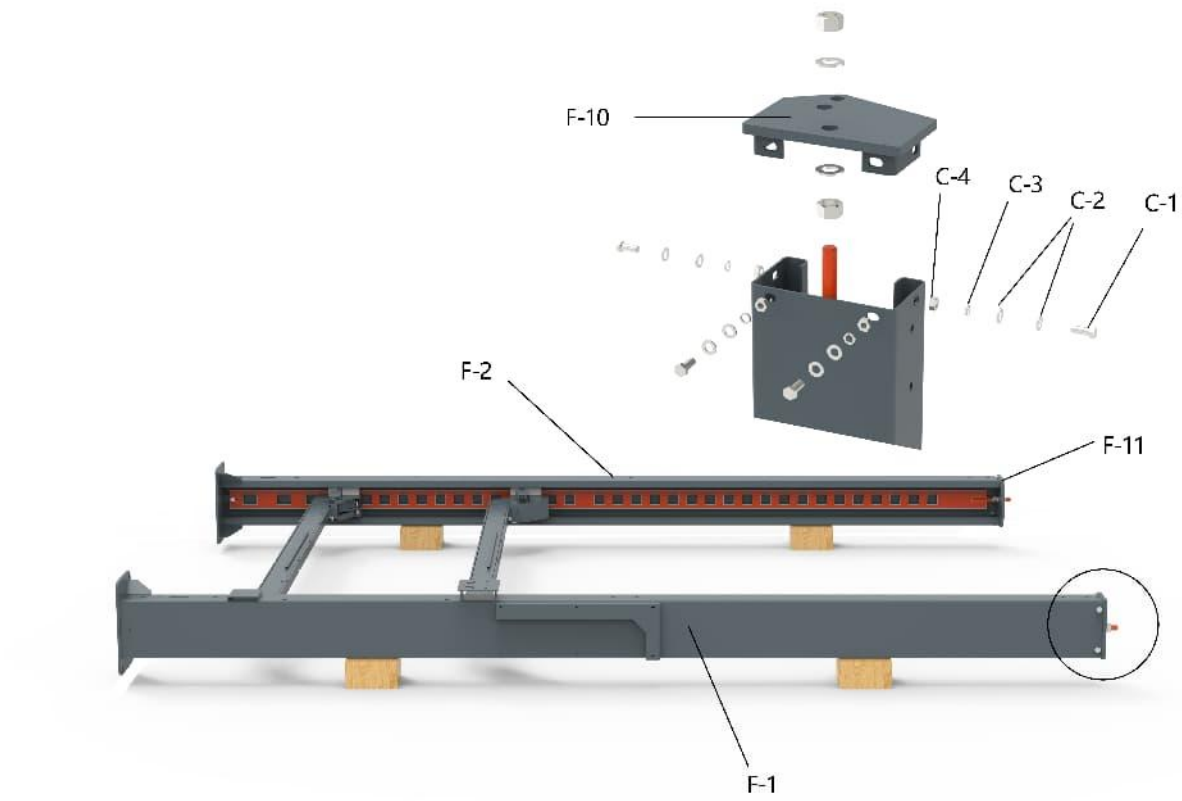

Step 7: Erect the Column Assemblies

According to the foundation layout marked on the ground, raise the column assemblies to the upright position.

Use a forklift to carefully lift and position the columns.

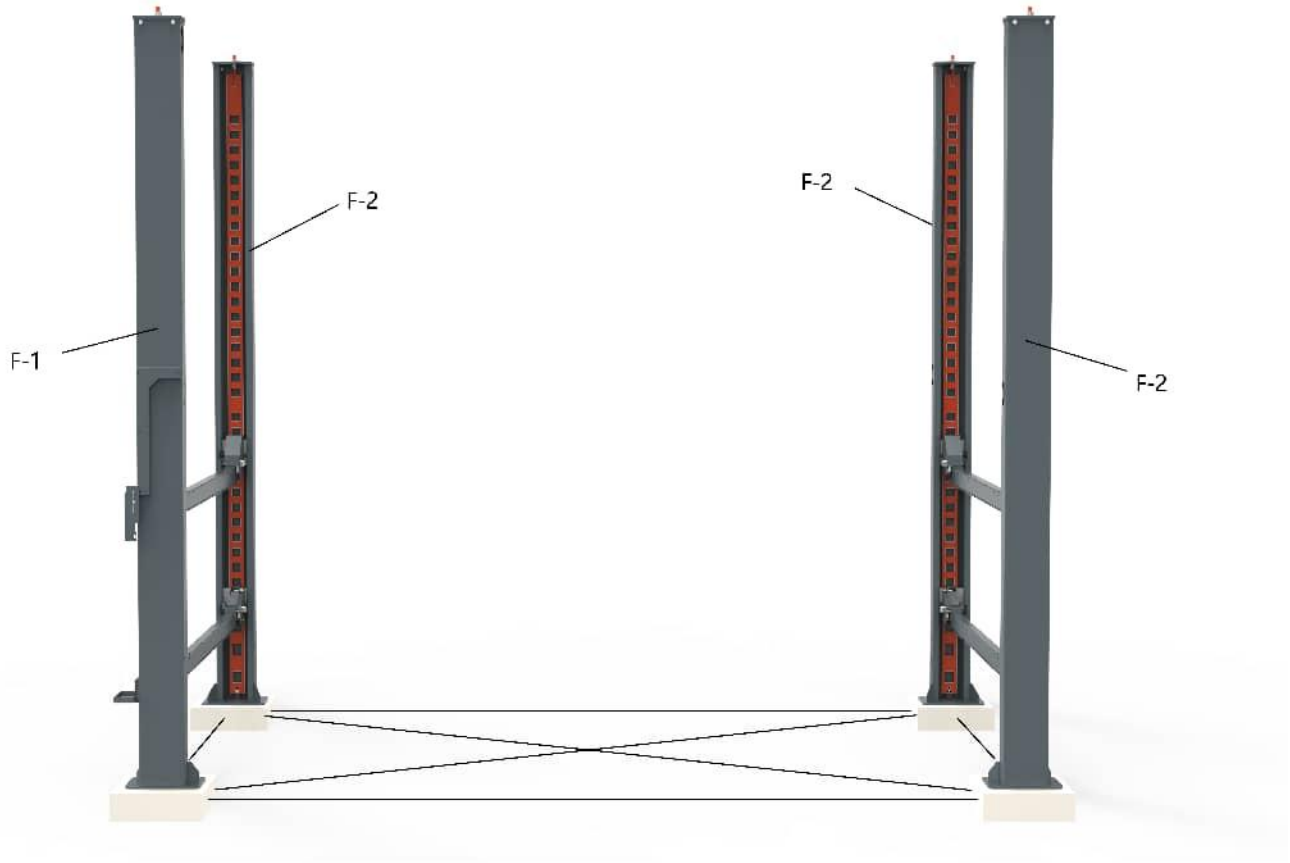

Step 8: Install the Lower Floor Main Platform Assembly

Use a forklift to lift the **Lower Floor Main Platform Assembly (F-12)** and position it above the lower Floor cross beams. Install the **Hook Assembly (F-22)**.

Secure it using:

- **M12×80 Hex Head Bolts (C-53)**
- **Ø12 Flat Washers (C-54)**
- **Ø12 Spring Washers (C-55)**
- **M12 Nuts (C-56)**

Tighten all fasteners using the open-end wrench and adjustable wrench provided in the tool kit.

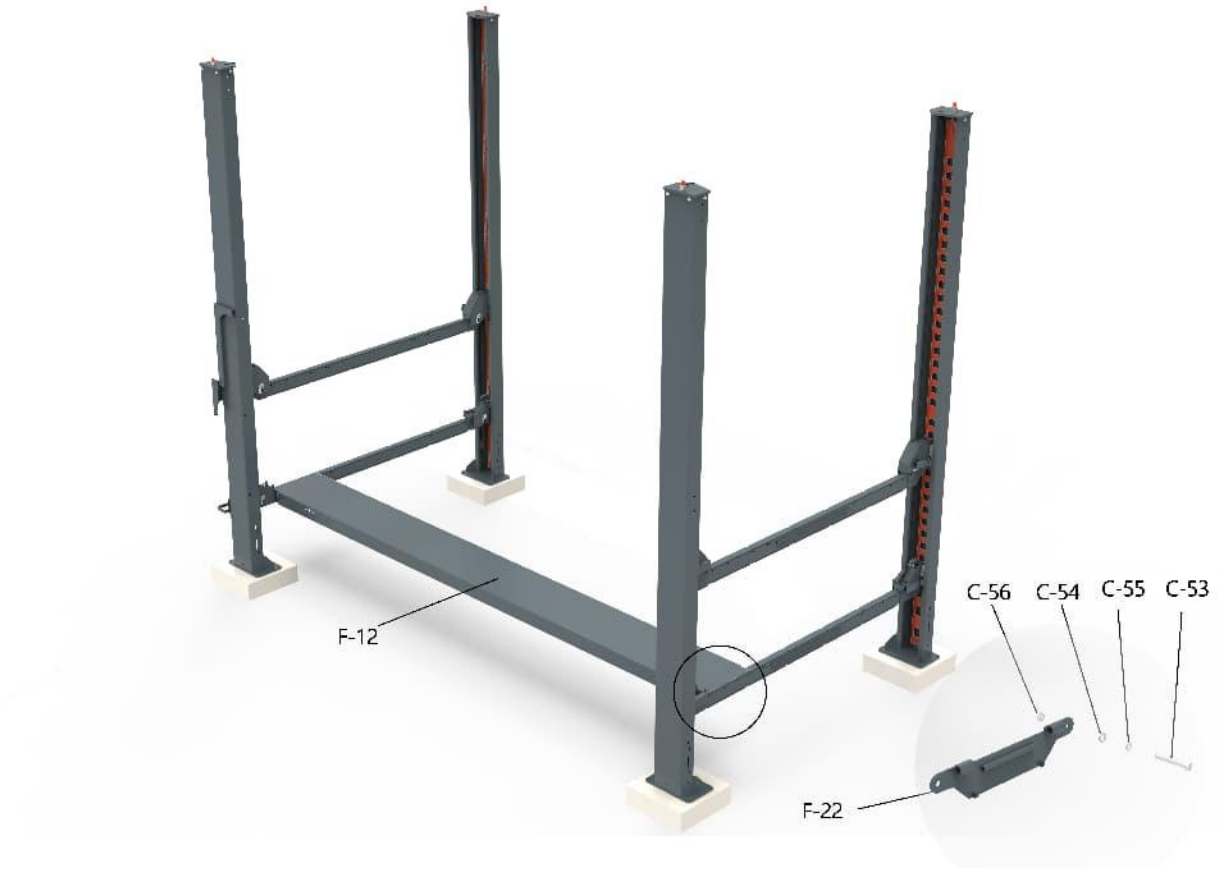

Hide all other components and display the routing of the lower floor steel wire rope.

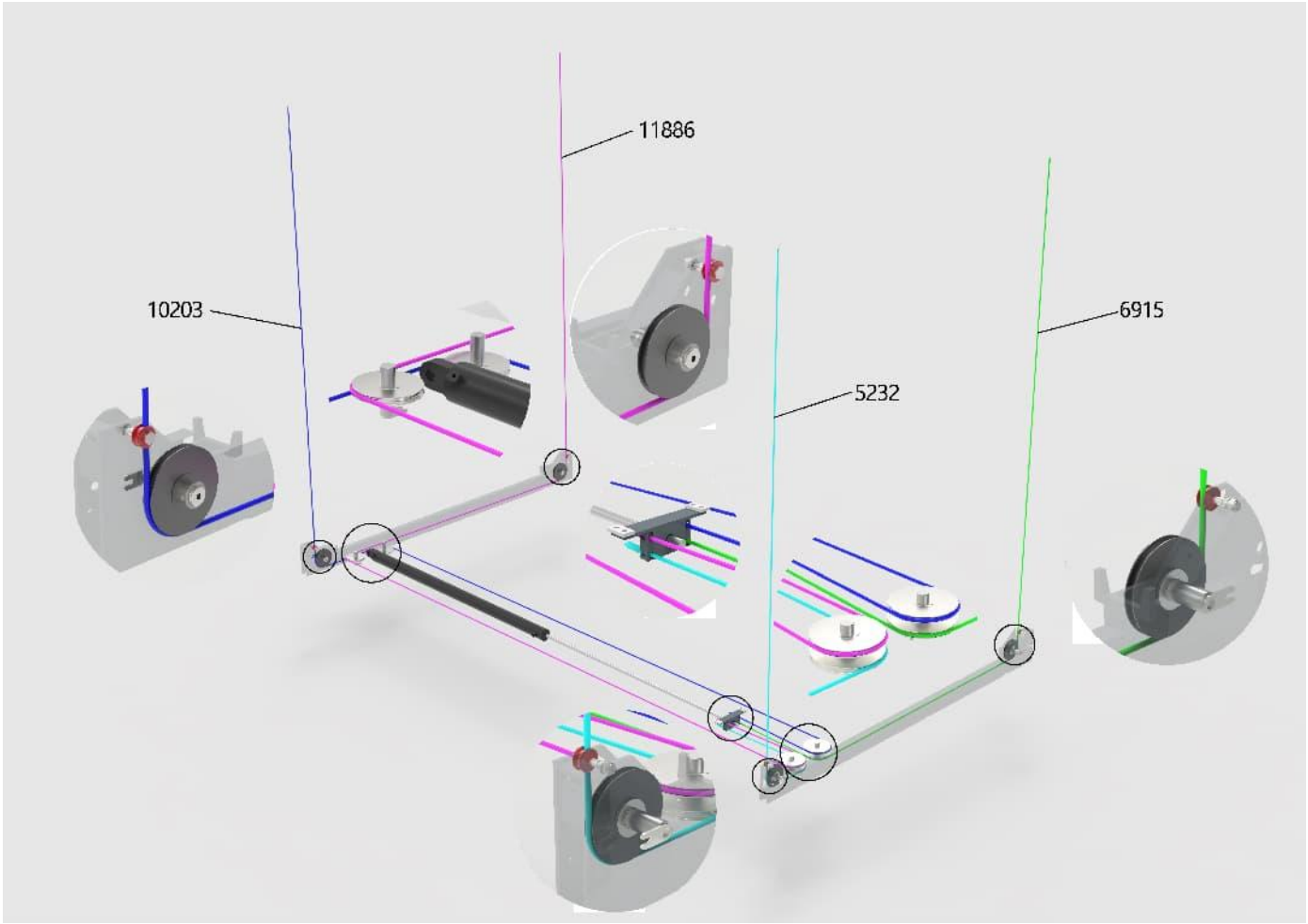

Step 9: Install the Upper Floor Main Platform Assembly

Use a forklift to lift the **Upper Floor Main Platform Assembly (F-14)** and position it above the upper floor cross beams. Install the **Hook Assembly**.

Secure it using:

- **M12×80 Hex Head Bolts (C-53)**
- **Ø12 Flat Washers (C-54)**
- **Ø12 Spring Washers (C-55)**
- **M12 Nuts (C-56)**

Tighten all fasteners using the open-end wrench from the tool kit while the forklift provides support.

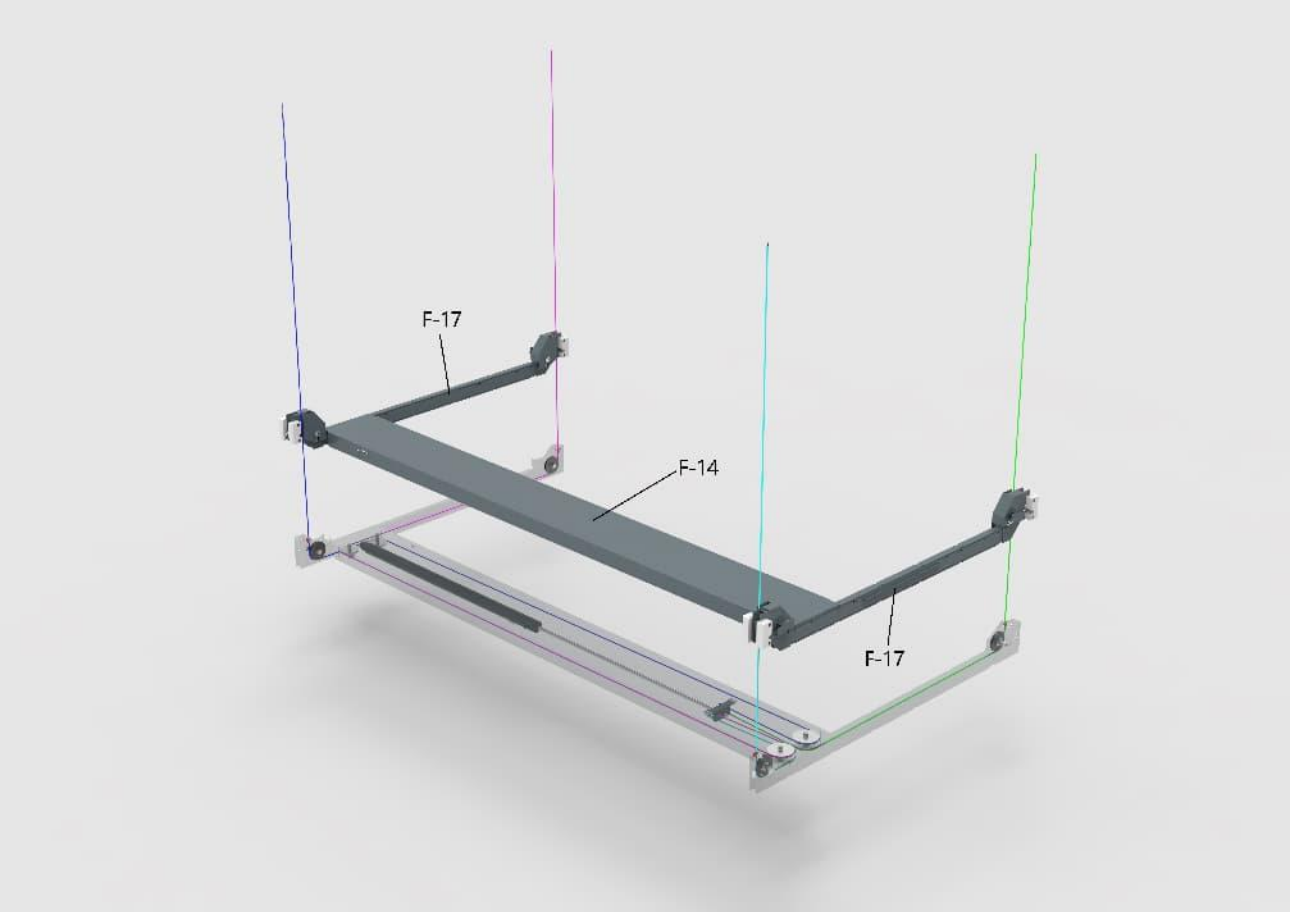

Hide all other components and display the routing of the upper floor steel wire rope.

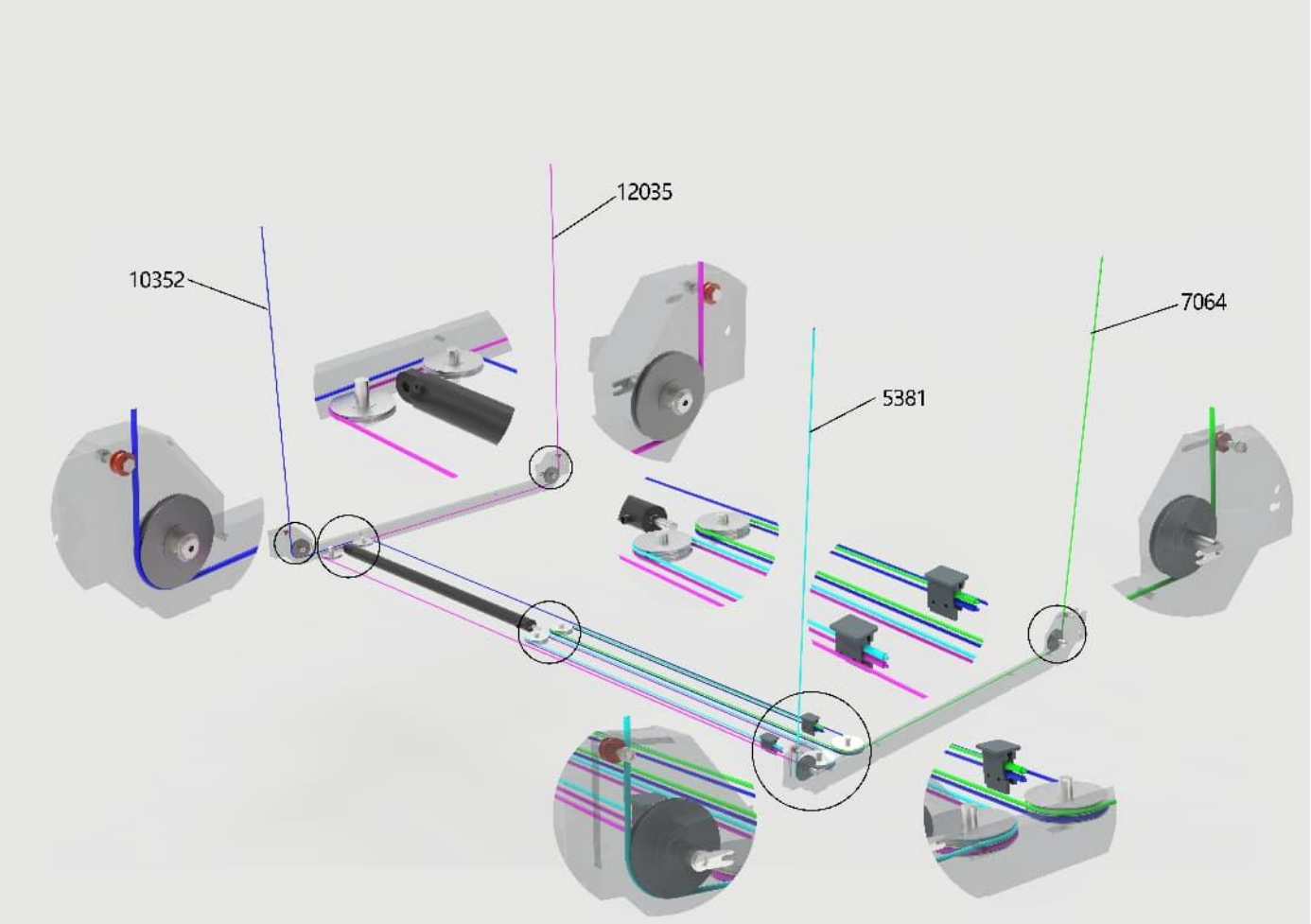

Step 10: Install the Secondary Platform Assemblies

Use a forklift to lift the **Lower Floor Secondary Platform Assembly (F-13)** and the **Upper Floor Secondary Platform Assembly (F-15)**, and position them above the corresponding lower and upper cross beams. Install the **Hook Assemblies**.

Secure them using:

- **M12×80 Hex Head Bolts (C-53)**
- **Ø12 Flat Washers (C-54)**
- **Ø12 Spring Washers (C-55)**
- **M12 Nuts (C-56)**

Tighten all fasteners using the open-end wrench and the forklift from the tool kit.

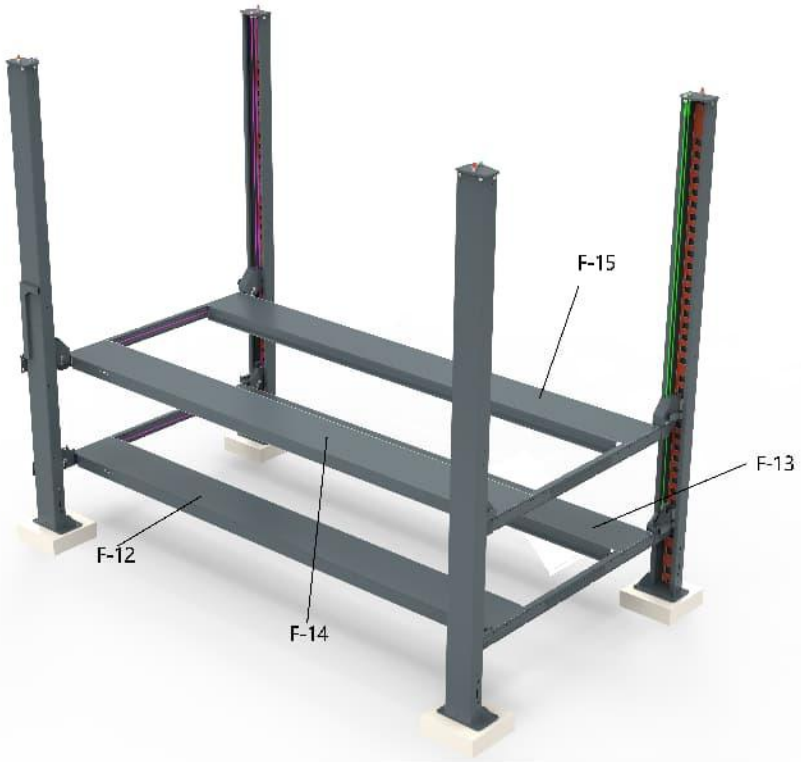

Step 11: Install the Column Cross Beam Assembly

Install the **Column Cross Beam Assembly (F-4)**.

Secure it using:

- **M12×30 Hex Head Bolts (C-1)**
- **Ø12 Flat Washers (C-2)**
- **Ø12 Spring Washers (C-3)**

Tighten all fasteners securely.

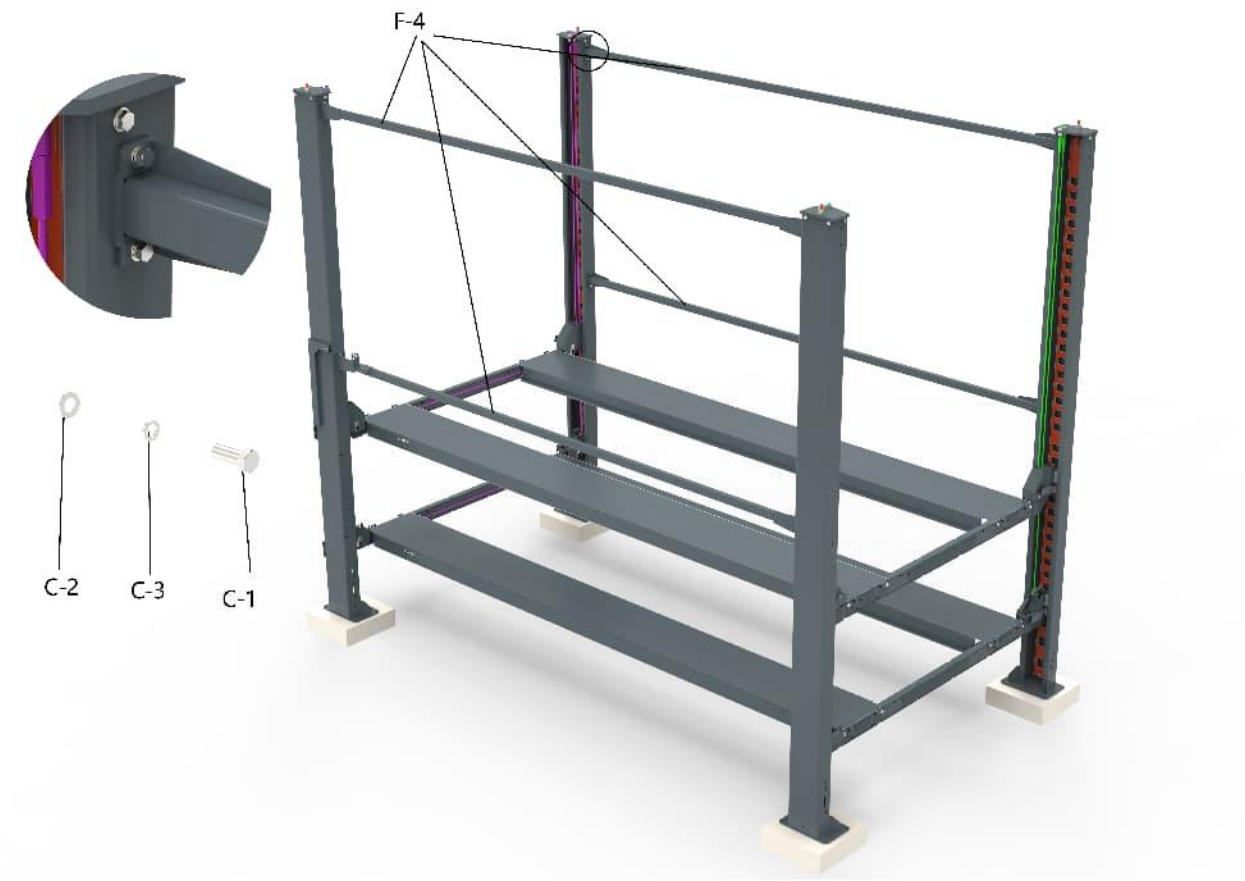

Step 12: Install the Power Unit on the Main Column (F-27), and Install the Pneumatic and Hydraulic Components

1. Power Unit and Hydraulic System Installation

Install the **Power Unit (F-27)** onto the main column.

Components Required:

- **Power Unit Mounting Bracket (F-5)**
- **M8×15 Button Head Socket Cap Screws (C-9)**
- **Ø8 Flat Washers (C-10)**
- **Ø8 Spring Washers (C-11)**
- **Power Unit (F-27)**
- **M8×35 Hex Head Bolts (C-5)**
- **Ø8 Flat Washers (C-6)**
- **Ø8 Spring Washers (C-7)**
- **M8 Nuts (C-8)**
- **Rubber Vibration Pads (C-12)**
- **Hydraulic Hose Fittings with Copper Washers (C-29)**
- **Manual Hydraulic Three-Way Ball Valve (C-13)**
- **Fitting for Manual Hydraulic Three-Way Ball Valve (C-25)**
- **90° Elbow Fitting for Manual Hydraulic Three-Way Ball Valve (C-26)**
- **Lower Floor Hydraulic Hose Adapter (C-27)**
- **Upper Floor Hydraulic Hose Adapter (C-28)**
- **Hydraulic Hose (C-18)**
- **Hydraulic Hose (C-19)**
- **Hydraulic Hose (C-20)**

Tighten all fasteners using the open-end wrench and adjustable wrench provided in the tool kit.

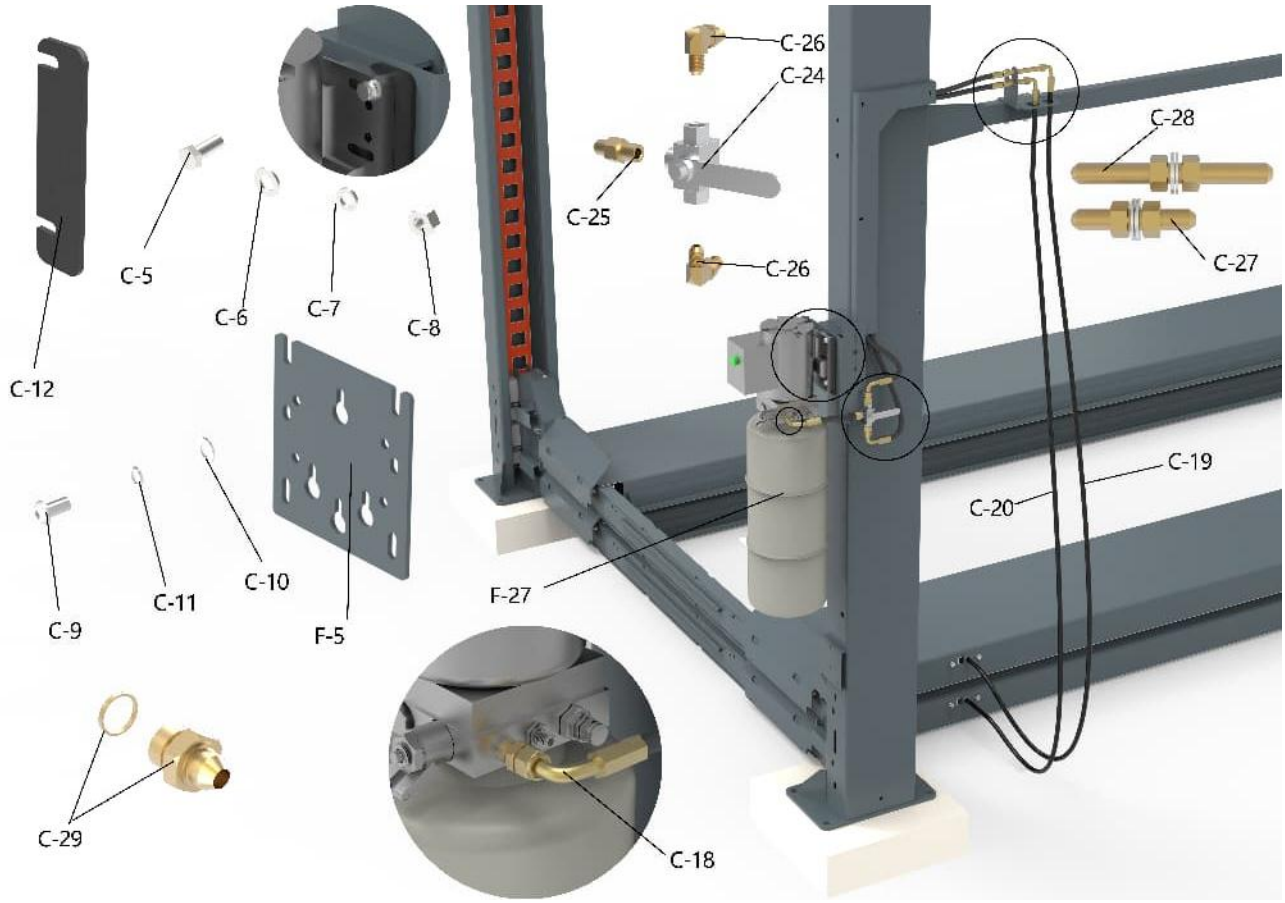

2. Pneumatic Components Installation on the Column

Install the pneumatic components on the column.

Components Required:

- **M6×15 Phillips Pan Head Screws (C-40)**
- **Ø6 Flat Washers (C-41)**
- **Ø6 Spring Washers (C-42)**
- **Air Filter Regulator / Oil-Water Separator (C-37)**
- **Ø6 Air Filter Fitting (C-38)**
- **Ø8 Air Filter Fitting (C-39)**
- **Air Hose (C-43)**
- **Air Hose (C-44)**
- **Manual Lever Valve Assembly (C-45)**
- **Manual Valve Mounting Bracket (F-7)**
- **M4×35 Socket Head Cap Screws (C-14)**
- **Ø4 Flat Washers (C-15)**
- **Ø4 Spring Washers (C-16)**
- **M4 Nuts (C-17)**
- **Column Hydraulic Hose Protective Cover (F-6)**
- **M6×45 Socket Head Cap Screws (C-30)**
- **Ø6 Flat Washers (C-31)**

- **Ø6 Spring Washers (C-32)**
- **Air Filter Regulator Protective Bracket (F-9)**

Use the adjustable wrench and Phillips screwdriver provided in the tool kit to complete the installation.

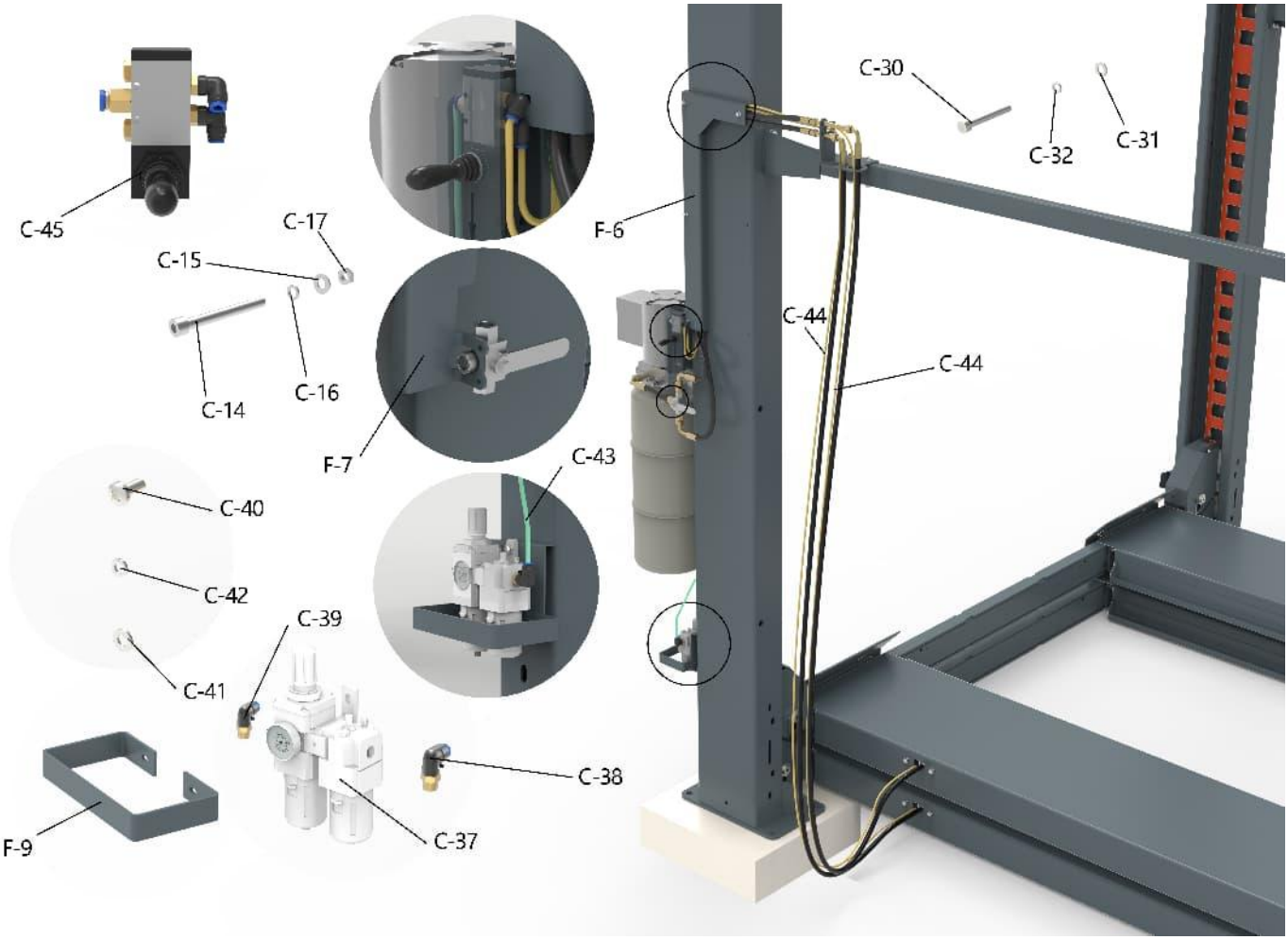

Step 13: Electrical Connection, Hydraulic Oil Filling, and Initial Test Run

Connect the power supply according to the specifications indicated on the motor nameplate. Fill the system with hydraulic oil. Recommended hydraulic oil grade: **N32 or N46**. Jog the lift upward briefly and observe whether the steel wire ropes are positioned correctly.

Raise the **lower floor platform** to approximately **1 meter**, then stop. Raise the **upper floor platform** to approximately **1.5 meters**, then stop.

Operate the lowering handle on the power unit to bring the lift into the **locked position**. Once the lift is securely locked, begin connecting the pneumatic lines.

Use the screwdriver, utility knife, and electrical tape provided in the tool kit during installation.



Step 14: Connect Air Supply and Adjust Steel Wire Rope Tension

Connect the compressed air supply. Press the power unit button to raise the platform until the safety hook disengages from the safety lock hole, then release the button.

With one hand, press and hold the **unlock valve** (← direction) to release the safety hook.

With the other hand, operate the lowering handle on the power unit to lower the platform to the lowest position. Adjust the tension of the steel wire ropes to ensure that all ropes have equal tension.

Use the open-end wrench and adjustable wrench provided in the tool kit to complete the adjustment.



Step 15: Install the Drive-On Ramp and Wheel Stop Assemblies

Install the following components:

- **Lower Floor Drive-On Ramp Assembly (F-18)**
- **Upper Floor Drive-On Ramp Assembly (F-19)**
- **Ramp Connection Pin Assembly (F-20)**
- **Wheel Stop Assembly (F-21)**

Use a rubber hammer to assist with installation where necessary.

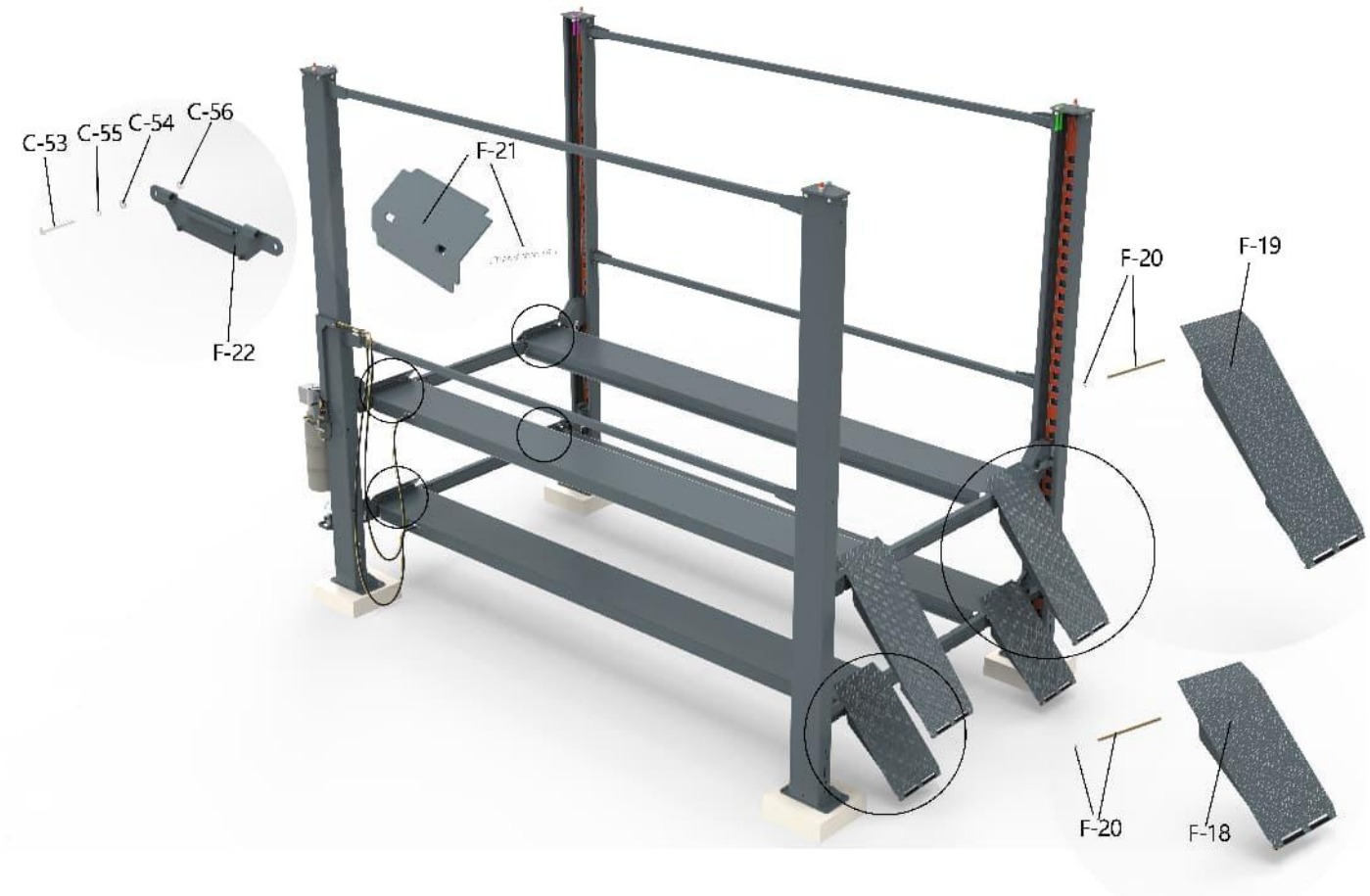

Step 16: Install the Runway Infill Plates (Optional parts)

Install the following components:

- **Wide Runway Infill Plate (F-23)**
- **Wide Runway Infill Plate (F-24)**
- **Narrow Runway Infill Plate (F-25)**
- **Narrow Runway Infill Plate (F-26)**

Use the open-end wrench and socket wrench provided in the tool kit to complete the installation.



Step 17: Leveling, Anchoring, and Final Finishing

Use a spirit Floor to check the vertical alignment of the columns and the horizontal level of the platforms. Adjust the alignment using **round slotted shims** as required. Secure the air hoses and hydraulic hoses together using **cable ties**.

After confirming proper leveling and alignment: Drill the anchor bolt holes using a hammer drill. Install the expansion anchor bolts to securely fasten the lift to the foundation. Install the grease nipples and apply grease to the designated lubrication points.

Clean the installation area, remove debris, wipe off any oil stains from the equipment, and return all tools to their proper storage locations.

Tools required: hammer, spirit level, hammer drill.

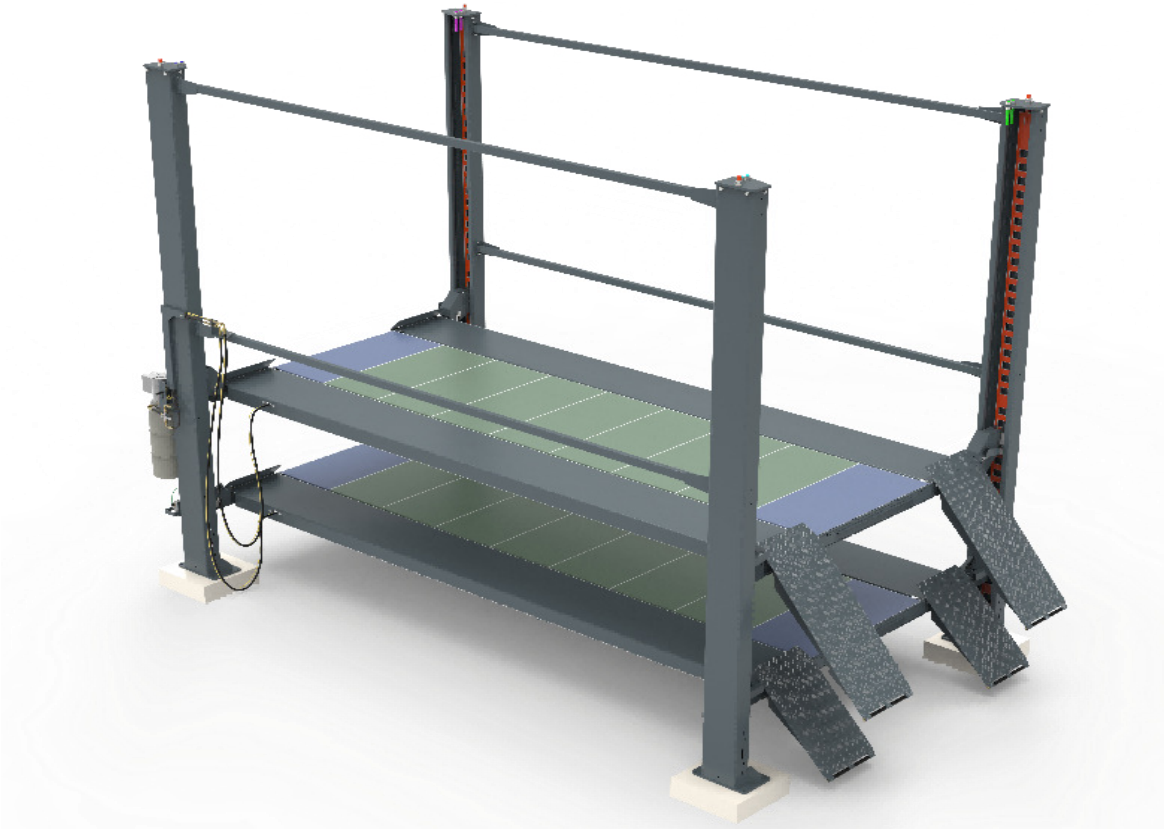

7. **Hydraulic System and Electrical Components**

1. Exploded View of the Hydraulic Power Unit
2. Hydraulic System of the Equipment
    a. Hydraulic Schematic Diagram
    b. Hydraulic Components List
    c. Operating Principle of the Hydraulic System
    d. Electrical Schematic Diagram

1. Exploded View of the Hydraulic Power Unit

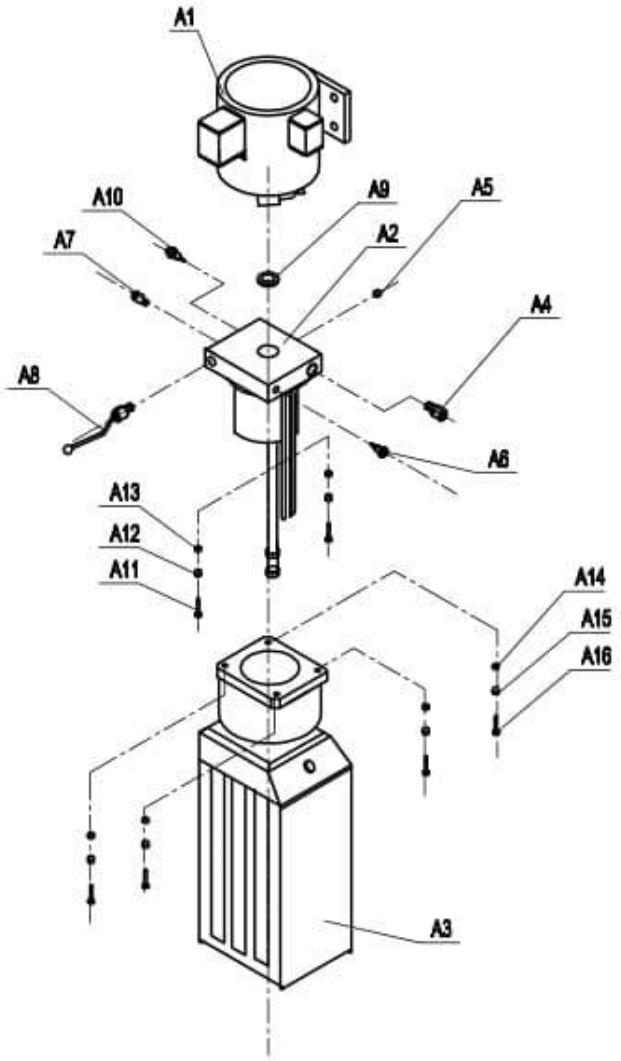

2. Hydraulic System of the Equipment

Serial	Name	Quantity	Serial	Name	Quantity
A1	Electric Motor	1	A9	Sealing Gasket	1
A2	Valve Spool	1	A10	Plug	1
A3	Oil Tank	1	A11	M5×40 Hex Head Bolt	4
A4	Lowering Flow Control Valve	1	A12	Φ5 Flat Washer	4
A5	Plug	1	A13	Φ5 Spring Washer	4
A6	Oil Outlet	1	A14	M6X20 Hex Head Bolt	4
A7	Oil Outlet	1	A15	Φ6 Flat Washer	4
A8	Manual Lever Valve	1	A16	Φ6 Spring Washer	4

a. Hydraulic Schematic Diagram

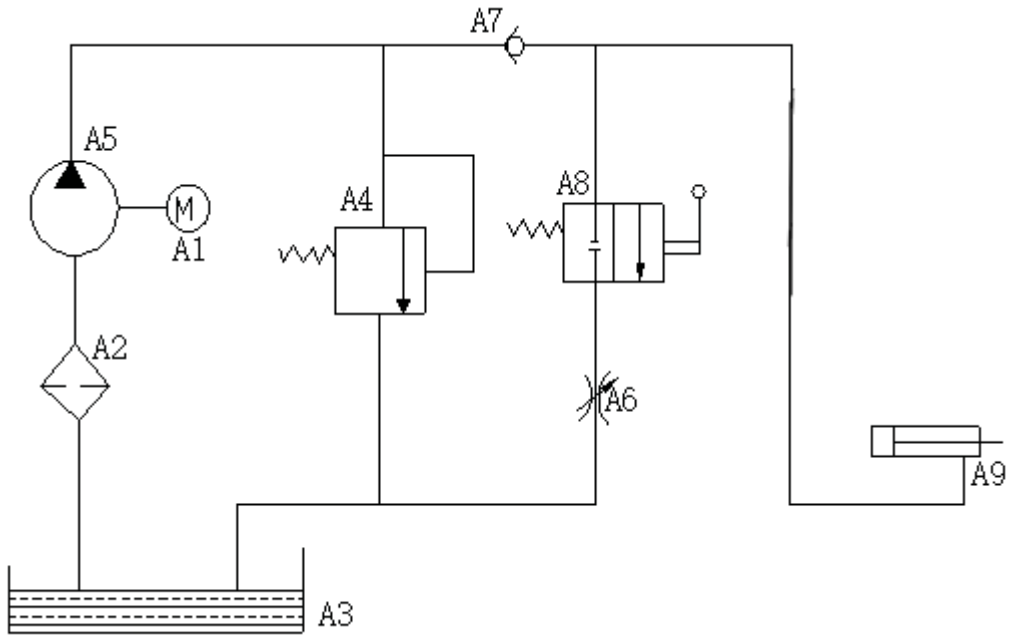

b. Hydraulic Components List

Serial	Name	Model	Specification	Quantity	Notes
A1	Electric Motor			1	
A2	Oil Filter			1	
A3	Oil Tank			1	
A4	Relief Valve			1	
A5	Hydraulic Pump			1	
A6	Flow Control Valve			1	
A7	Check Valve			1	
A8	Manual Valve			1	
A9	Hydraulic Cylinder			1	

c. Working Principle of the Hydraulic System

When the **Start button** on the power unit is pressed, the electric motor starts and drives the hydraulic pump. The pump draws hydraulic oil from the reservoir and delivers pressurized oil to **Cylinder A9**, causing the piston rod to extend. At this time, the **Relief Valve (A4)** remains closed.
(The relief valve pressure has been preset at the factory to ensure the lift meets its rated load capacity.)

If the system pressure exceeds the preset value of the relief valve, the relief valve will automatically release oil to prevent overpressure. When the Start button is released, the oil supply stops and the lifting operation ends. The lift is then ready for operation.

To lower the lift:

First, jog the Start button to raise the platform slightly. Then disengage the pneumatic safety hook. Press the **Manual Valve (A8)** to allow the hydraulic cylinder to release oil. The platform will begin to descend.

d. Electrical Schematic Diagram

(*During installation, wiring must strictly follow the electrical schematic diagram.*
Ensure all grounding points are properly and reliably grounded.
The input power supply must be equipped with leakage protection and overcurrent protection devices.)

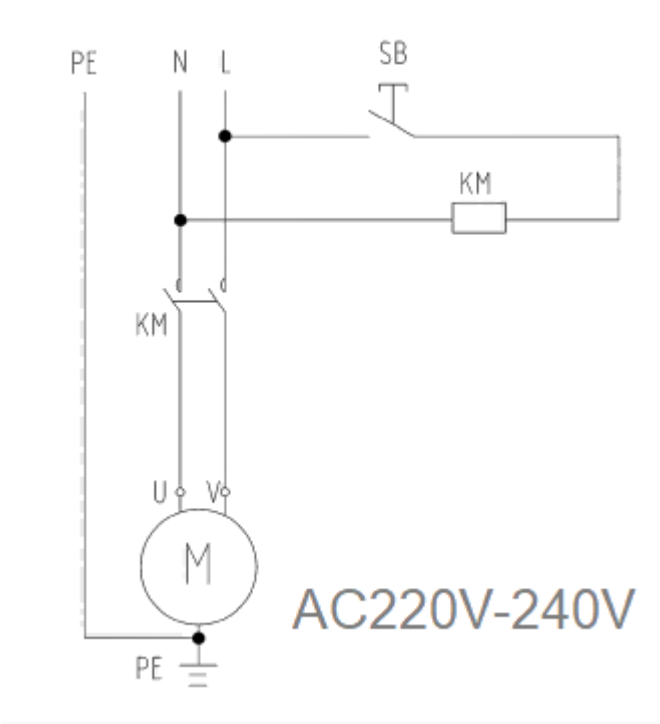

Code Name	Name	Model	Quantity
SB	Push Button (Jog)	LXW5-11M/L	1
KM	AC Contactor	CJXJ-18/01-240V	1

8. **Troubleshooting**

Serial	Fault phenomenon	Troubleshooting
1	Motor does not run	● Check whether the power supply is available ● Check if the wiring inside the motor terminal box is loose
2	Motor runs but no hydraulic pressure	● Single-phase motor rotation direction is incorrect; swap any two input wires ● Check whether the suction pipe inside the oil tank is detached
3	Hydraulic system slowly lowers after lifting (poor pressure holding)	● Clean the check valve and directional valve of the power unit
4	Safety lock cannot engage	● Check whether the safety hook position is normal ● Check whether the column position is correct ● Check the return spring of the safety hook
5	Motor or electrical failure	● Cut off the power immediately and have a qualified electrician inspect, repair, and replace components

9. **Maintenance and Inspection**

Daily Maintenance and Inspection

1. Check the working position of the safety lock during operation.

2. Check the engagement and release of the safety lock and the column lock plate.

3. Check for leaks in hydraulic fittings, pneumatic fittings, and hoses.

4. Inspect wire rope connections for bending, breakage, or looseness.

5. Check for wear on wire ropes during lifting and lowering.

6. Check all circlip connections to ensure they are secure.

7. Inspect all bolts, nuts, and screws; tighten immediately if loose.

8. Check whether electrical wires and switches are damaged.

9. Check the foundation strength around the expansion bolts.

10. After the lift is in service, lubricate the sheave shafts with a grease gun at least once a year or on a regular basis.

Weekly Maintenance and Inspection

1. Check the strength and connection of expansion bolts; tighten immediately if loose.

2. Check the foundation strength around the expansion bolts.

3. Check the hydraulic oil level.

4. Inspect and tighten any loose bolts, nuts, and screws.

5. Check the fit between all sheaves and sheave shafts.

Monthly Maintenance and Inspection

1. Lubricate the sheaves and sheave shafts.

2. Inspect the wire ropes for wear; replace immediately if severely worn.

3. Replace the hydraulic oil.

10. **Detailed Assembly Components**

1. **Lower Floor Cross Beam parts**

Lower Floor Cross Beam Installation				
Serial	Name	Specification	Quantity	Notes (Location)
1	Pneumatic Safety Lock Block Assembly		2	Cross Beam Safety Lock
2	Pneumatic Safety Lock Block Assembly		2	Cross Beam Safety Lock
3	M6－20 Button Head Socket Cap Screw	GB/T70.2-2000	4	Pneumatic Safety Lock
4	M6－95 Socket Head Cap Screw	GB 818-85 H	4	Pneumatic Safety Lock
5	M6 Nut	GB/T41-86（4.8）	4	Pneumatic Safety Lock
6	Unlocking Air Cylinder	LMTAL16×20CB	4	
7	90° Air Cylinder Fitting (O-Ring Seal)	YPL6-M5	8	Air Hose Connection to Cylinder
8	M6 Rod End Bearing (Spherical Bearing / Heim Joint)	M6	8	Cylinder to Safety Lock Connection
9	Mechanical Safety Lock Block Assembly		4	Cross Beam Safety Lock
10	Unlocking Cylinder Spacer Sleeve	¢14/¢9--11mm	4	Air Cylinder
11	Safety Lock Pin	¢20--65mm	4	Safety Lock
12	Safety Lock Nylon Spacer Sleeve	¢35¢21-10mm	4	Safety Lock
13	¢10 Flat Washer	GB 95-85-C	4	Mechanical Safety Lock
14	¢10Spring Washer	GB 93-87	4	Mechanical Safety Lock
15	M10 Lock Nut	GB/T927-88	4	Mechanical Safety Lock
16	Tension Spring	¢12/¢1.5-100mm	8	Mechanical Safety Lock
17	M6-65 Socket Head Cap Screw	GB 70-85	8	Mechanical Safety Lock Tension Spring
18	M6－15 Button Head Socket Cap Screw	GB/T70.2-2000	8	Mechanical Safety Lock Tension Spring
19	Steel Wire Rope Limit Pulley (Zinc-Plated Steel)	¢36¢25/¢12-17mm	4	Mechanical Safety Lock
20	Steel Wire Rope Limit Pulley Hex Bolt (Zinc-Plated Steel)	¢12-42/M10-23mm	4	Mechanical Safety Lock
21	Steel Wire Rope Pulley	¢148/¢32/R5--20mm	4	
22	M8-50 Cup-Point Set Screw	GB 80-85	4	Steel Wire Rope Limit Stop
23	M8 Nut	GB/T41-86（4.8）	4	Steel Wire Rope Limit Stop
24	M8-15 Socket Head Cone-Point Set Screw	GB 78-85	4	Wire Rope Pulley Limit Spacer Sleeve

25	¢ 30 E-Clip (for Ø29 Shaft)	¢ 30/44-45/65MN Manganese Steel --2.5mm	4	Wire Rope Pulley Shaft
26	M8－15 Hex Head Bolt	GB/T5781C（4.8）	8	Wire Rope Pulley Shaft
27	¢ 8 Flat Washer	GB 95-85-C	8	Wire Rope Pulley Shaft
28	¢ 8 Spring Washer	GB 93-87	8	Wire Rope Pulley Shaft
29	¢ 32 Flat Washer --2mm	GB 95-85-C	4	Wire Rope Pulley Shaft
30	Wire Rope Pulley Limit Sleeve	¢ 45/ ¢ 32--14mm	4	Wire Rope Pulley Shaft
31	Wire Rope Pulley Shaft	¢ 32-119-80mm	4	Cross Beam Wire Rope Pulley
32	Grease Nipple		4	Cross Beam Wire Rope Pulley Shaft
33	Cross Beam Protective Cover	184-225-29	4	Cross Beam
34	Hex / Socket Head Screws (Zinc-Plated)	Internal Thread M6×15 (Hex 14–31), External Thread M8×12	8	Protective Cover
35	M6－15 Phillips Pan Head Screw	GB 818-85 H	8	Protective Cover
36	¢ 6 Flat Washer	GB 95-85-C	8	Protective Cover
37	¢ 6 Spring Washer	GB 93-87	8	Protective Cover
38	M10－135 Socket Head Cap Screw	GB 818-85 H	8	Cross Beam Limit Slider Block
39	¢ 10 Flat Washer	GB 95-85-C	16	Cross Beam Limit Slider Block
40	M10 Lock Nut	GB/T927-88	8	Cross Beam Limit Slider Block
41	Cross Beam Limit Slider Block			Lower Floor Cross Beam Assembly
42	Flat Washer--2mm			Safety Lock Pin
43	Cross Beam Unlocking Cylinder Cover	150-84.8-35	4	Lower Floor Cross Beam Assembly
44	¢ 6 Air Hose Tee Fitting	YPE-6	4	Air Cylinder
45	¢ 6 Air Hose	PU6-4---L=680mm	2	Air Cylinder (to be cut to length during assembly by the operator)
46	¢ 6 Air Hose	PU6-4---L=1900mm	2	Air Cylinder (to be cut to length during assembly by the operator)
47	¢ 6 Air Hose YPE-6 Connector	PU6-4---L=550mm	2	Air Cylinder (to be cut to length during

				assembly by the operator)
48	Lower Floor Cross Beam Assembly	2760-65-315	2	

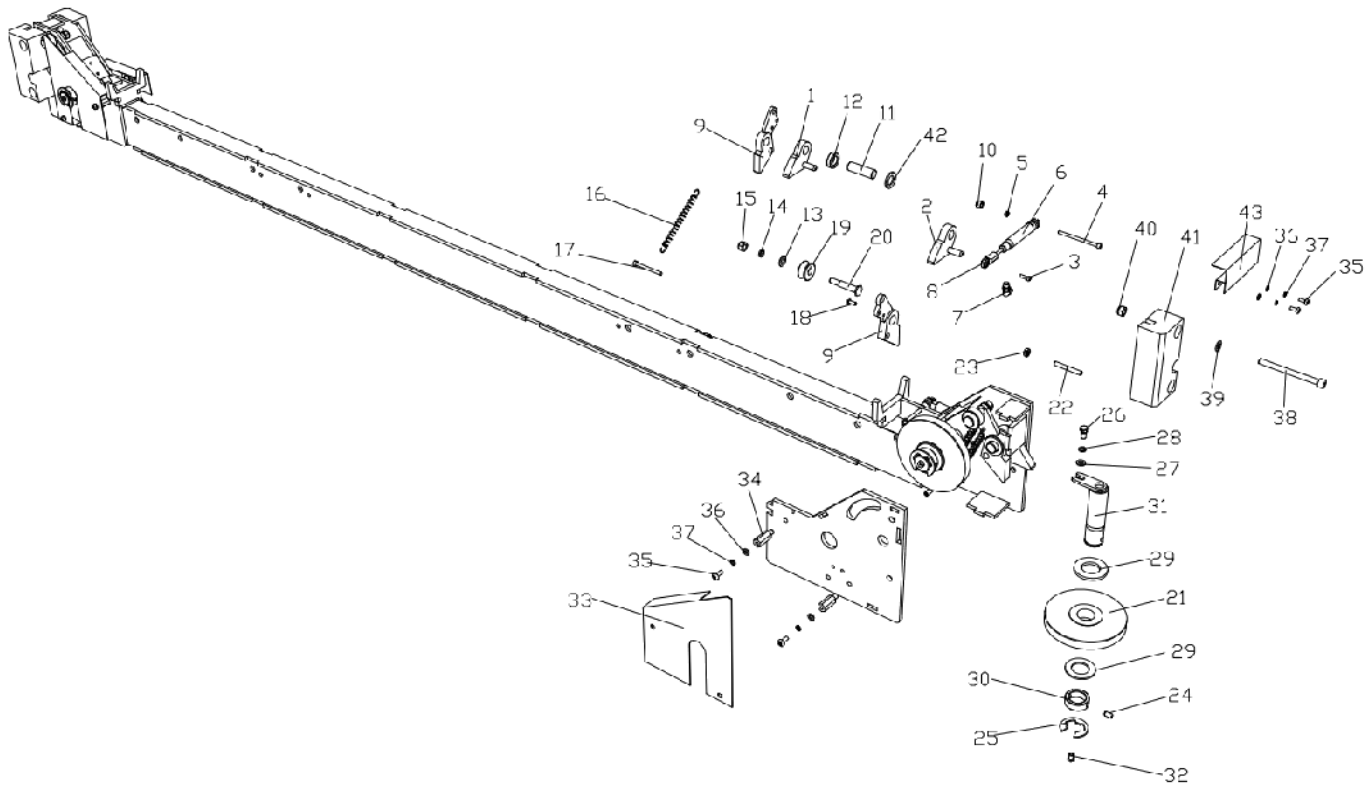

2. Upper Floor Cross Beam parts

Upper Floor Cross Beam Installation				
Serial	Name	Specification	Quant ity	Notes (location)
1	Pneumatic Safety Lock Block Assembly		2	Cross Beam Safety Lock
2	Pneumatic Safety Lock Block Assembly		2	Cross Beam Safety Lock
3	M6—20 Button Head Socket Cap Screw	GB/T70.2-2000	4	Pneumatic Safety Lock
4	M6—95 Socket Head Cap Screw	GB 818-85 H	4	Pneumatic Safety Lock
5	M6 Nut	GB/T41-86（4.8）	4	Pneumatic Safety Lock

6	Unlocking Air Cylinder	LMTAL16×20CB	4	
7	90° Cylinder Fitting (with O-Ring Seal)	YPL6-M5	8	Air Hose Connection to Cylinder
8	M6 Rod End Bearing (Spherical Bearing / Heim Joint)	M6	8	Cylinder to Safety Lock Connection
9	Mechanical Safety Lock Block Assembly		4	Cross Beam Safety Lock
10	Unlocking Cylinder Spacer Sleeve	¢14/¢9--11mm	4	Air Cylinder
11	Safety Lock Pin	¢20--65mm	4	Safety Lock
12	Safety Lock Nylon Spacer Sleeve	¢35¢21-10mm	4	Safety Lock
13	¢10 Flat Washer	GB 95-85-C	4	Mechanical Safety Lock
14	¢10 Spring Washer	GB 93-87	4	Mechanical Safety Lock
15	M10 Lock Nut	GB/T927-88	4	Mechanical Safety Lock
16	Tension Spring	¢12/¢1.5-100mm	8	Mechanical Safety Lock (Same as PP8S Model)
17	M6-65 Socket Head Cap Screw	GB 70-85	8	Mechanical Safety Lock Tension Spring
18	M6－15 Button Head Socket Cap Screw	GB/T70.2-2000	8	Mechanical Safety Lock Tension Spring
19	Steel Wire Rope Limit Pulley (Zinc-Plated Steel)	¢36¢25/¢12-17mm	4	Mechanical Safety Lock
20	Steel Wire Rope Limit Pulley Hex Bolt (Zinc-Plated Steel)）	¢12-42/M10-23mm	4	Mechanical Safety Lock
21	Steel Wire Rope Pulley	¢148/¢32/R5--20mm	4	
22	M8-50 Cup-Point Set Screw	GB 80-85	4	Steel Wire Rope Limit Stop
23	M8 Nut	GB/T41-86（4.8）	4	Steel Wire Rope Limit Stop
24	M8-15 Cone-Point Set Screw	GB 78-85	4	Wire Rope Pulley Limit Spacer Sleeve
25	¢30 E-Clip (for Ø29 Shaft)	¢30/44-45/65MN Manganese Steel --2.5mm	4	Wire Rope Pulley Shaft
26	M8－15 Hex Head Bolt	GB/T5781C（4.8）	8	Wire Rope Pulley Shaft
27	¢8 Flat Washer	GB 95-85-C	8	Wire Rope Pulley Shaft
28	¢8 Spring Washer	GB 93-87	8	Wire Rope Pulley Shaft
29	¢32 Flat Washer --2mm	GB 95-85-C	4	Wire Rope Pulley Shaft
30	Wire Rope Pulley Limit Sleeve	¢45/¢32--14mm	4	Wire Rope Pulley Shaft

31	Wire Rope Pulley Shaft	¢32-119-80mm	4	Cross Beam Wire Rope Pulley
32	Grease Nipple		4	Cross Beam Wire Rope Pulley Shaft
33	Cross Beam Protective Cover	184-225-29	4	Cross Beam
34	M6—15 Phillips Pan Head Screw	GB 818-85 H	4	Protective Cover
35	¢6 Flat Washer	GB 95-85-C	4	Protective Cover
36	¢6 Spring Washer	GB 93-87	4	Protective Cover
37	M10—135 Socket Head Cap Screw	GB 818-85 H	8	Cross Beam Limit Slider Block
38	¢10 Flat Washer	GB 95-85-C	16	Cross Beam Limit Slider Block
39	M10 Lock Nut	GB/T927-88	8	Cross Beam Limit Slider Block
40	Cross Beam Limit Slider Block			Upper Floor Cross Beam Assembly
41	Flat Washer --2mm			Safety Lock Pin
42	Cross Beam Unlocking Cylinder Cover	150-84.8-35	4	Upper Floor Cross Beam Assembly
43	¢6 Air Hose Tee Fitting	YPE-6	4	Air Cylinder
44	¢6 Air Hose	PU6-4---L=680mm	2	Air Cylinder (to be cut to length during assembly by the operator)
45	¢6 Air Hose	PU6-4---L=1900mm	2	Air Cylinder (to be cut to length during assembly by the operator)
46	¢6 Air Hose YPE-6 Connector	PU6-4---L=550mm	2	Air Cylinder (to be cut to length during assembly by the operator)
47	Upper Floor Cross Beam Assembly	2760-65-315	2	

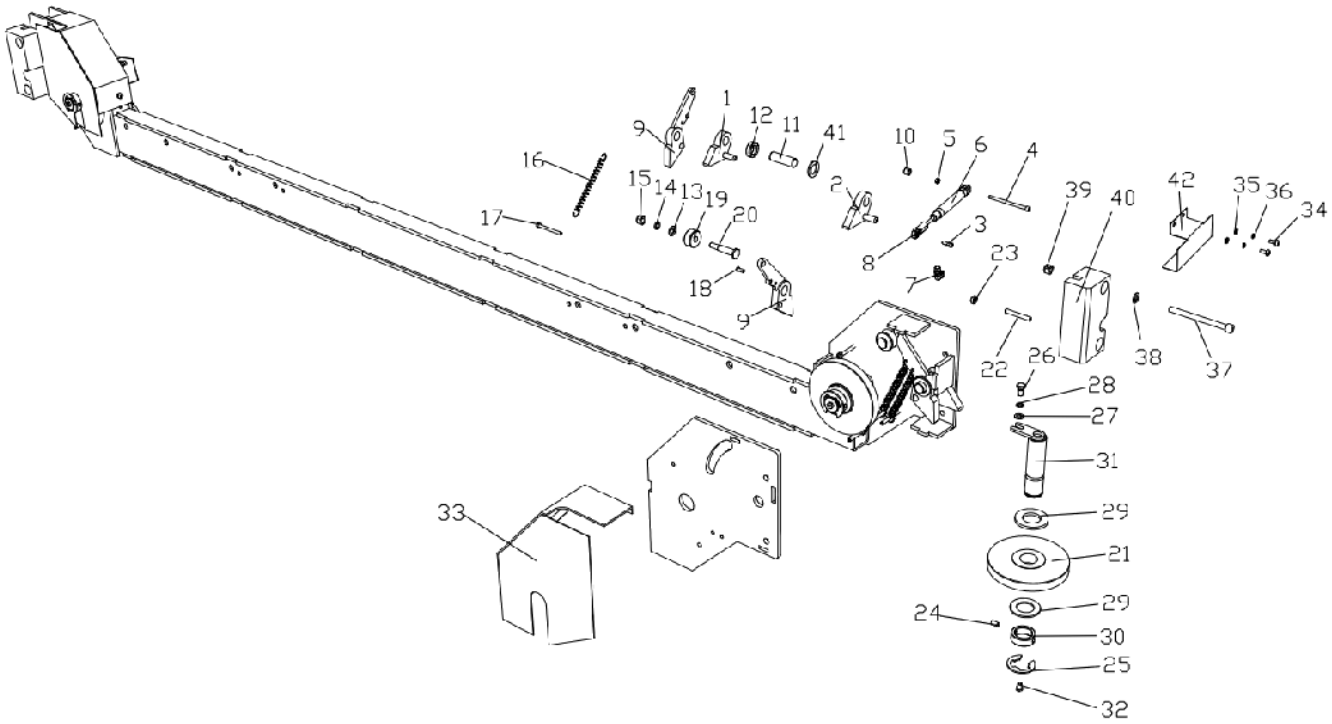
1
2
3
4
5
6
7
8
9
10
11
12
13
14
15
16
17
18
19
20
21
22
23
24
25
26
27
28
29
30
31
32
33
34
35
36
37
38
39
40
41
42

3. Column Parts

Column Installation				
Serial	Name	Specification	Quantity	Notes (location)
1	Main Column	4180-250-130	1	
2	Secondary Column	4180-250-130	3	
3	Safety Lock Plate	4224-101-10	4	Column
4	Column Top Cover – Left	262-200-16	2	Column
5	Column Top Cover – Right	262-200-16	2	Column
6	M12-30 Hex Head Bolt	GB/T5781C(4.8)	36	Column Cover Plate / Safety Lock Plate / Column Cross Beam
7	∅12 Flat Washer	GB 96-85-C	68	Column Cover Plate / Safety Lock Plate / Column Cross Beam
8	∅12 Spring Washer	GB 93-87	36	Column Cover Plate / Safety Lock Plate / Column Cross Beam
9	M12 Nut	GB/T41-86(4.8)	32	Column Cover Plate / Column Cross Beam
10	₵24 Flat Washer	GB 95-85-C	8	Column Safety Lock Plate
11	M24 Nut	GB/T41-86（4.8）	8	Column Safety Lock Plate
12	M8－35 Hex Head Bolt	GB/T5781C（4.8）	4	Power Unit
13	₵8 Flat Washer	GB 95-85-C	8	Power Unit
14	₵8 Spring Washer	GB 93-87	4	Power Unit
15	M8 Nut	GB/T41-86（4.8）	4	Power Unit
16	Rubber Vibration Pad	160-47-5	2	Power Unit – Steel Type
17	Power Unit Mounting Bracket	175-175-5	1	Column
18	M8－15 Button Head Socket Cap Screw	GB/T70.2-2000	2	Power Unit Mounting Bracket
19	₵8 Flat Washer	GB 95-85-C	2	Power Unit Mounting Bracket
20	₵8 Spring Washer	GB 93-87	2	Power Unit Mounting Bracket
21	Unlocking Valve Bracket		1	Power Unit Mounting Bracket
22	Manual Hydraulic Three-Way Ball Valve	NPT1/4	1	Manual Hydraulic Directional Valve
23	M4－35 Socket Head Cap Screw	GB 818-85 H	2	NPT1/4 Hydraulic Directional Valve
24	₵4 Flat Washer	GB 95-85-C	4	NPT1/4 Hydraulic Directional Valve
25	₵4 Spring Washer	GB 93-87	2	NPT1/4 Hydraulic Directional Valve

26	M4 Nut	GB/T41-86（4.8）	2	NPT1/4 Hydraulic Directional Valve
27	Fitting for Manual Hydraulic Three-Way Ball Valve	SAE 9/16 Flat Seat – 9/16 Male Cone	1	Power Unit Fitting
28	90° Elbow Fitting for Manual Hydraulic Three-Way Ball Valve	9/16Male Cone--NPT1/4	2	Manual Hydraulic Three-Way Ball Valve with Hose Connection (1345 / 1255 mm)
29	Hydraulic Hose Protective Cover	595-245-30	1	Column
30	M6－45 Socket Head Cap Screw	GB 818-85 H	4	Hydraulic Hose Protective Cover
31	¢6 Flat Washer	GB 95-85-C	4	Hydraulic Hose Protective Cover
32	¢6 Spring Washer	GB 93-87	4	Hydraulic Hose Protective Cover
33	Column Cross Beam	4468-60-40	4	Column
34	Corrugated Hose Bracket		1	Column Cross Beam
35	M8－75 Socket Head Cap Screw	GB/T5781C（4.8）	2	Corrugated Hose Bracket
36	¢8 Flat Washer	GB 95-85-C	4	Corrugated Hose Bracket
37	¢8 Spring Washer	GB 93-87	2	Corrugated Hose Bracket
38	M8 Nut	GB/T41-86（4.8）	2	Corrugated Hose Bracket
39	Hydraulic Hose Adapter (Double Nut, Double Washer)	Double-Ended 9/16 Male Cone Fully Threaded Stud--80mm	1	Fitting for Lower Platform 4090 mm Hose
40	Hydraulic Hose Adapter (Double Nut, Double Washer)	Double-Ended 9/16 Male Cone Fully Threaded Stud--130mm	1	Fitting for Upper Platform 4000 mm Hose
41	M6－15 Phillips Pan Head Screw	GB 818-85 H	4	AL-3000-03 Oil-Water Separator
42	¢6 Flat Washer	GB 95-85-C	4	AL-3000-03 Oil-Water Separator
43	¢6 Spring Washer	GB 93-87	4	AL-3000-03 Oil-Water Separator
44	Oil-Water Separator	AL-3000-03	1	Main Column
45	Oil-water separator connector (3/8)- For Ø8 Air Hose	PL8-03（90° Elbow Fitting）	1	Air Inlet- Oil-Water Separator
46	Oil-water separator connector (3/8) – For Ø6 Air Hose	PL6-03（90° Elbow Fitting）	1	Air Outlet- Oil-Water Separator
47	Oil-Water Separator Bracket		1	Main Column
48	Power Unit		1	Main Column
49	Hydraulic Hose Fitting (with Copper Washer)	¢14 Copper Washer	1	Power Unit and Hydraulic Hose
50	3-Position 5-Way Spring Return Pneumatic Valve	4H230E-08(0.1--0.8mpa)	1	Unlock

51	90° Elbow Air Fitting for 3-Position 5-Way Valve (For Ø6 Air Hose)	PL6-02	3	4H230E-08(0.1--0.8mpa) 3-Position 5-Way Spring Return Pneumatic Valve
52	3-position 5-way self-resetting exhaust valve exhaust muffler	SLM-01	2	4H230E-08(0.1--0.8mpa) 3-Position 5-Way Spring Return Pneumatic Valve
53	Hydraulic Hose	Straight × 90° Elbow Hose (L = 185 mm) – SAE 9/16	1	Hydraulic Hose from Power Unit to Directional Valve
54	Hydraulic Hose	Straight × 90° Elbow Hose (L = 1345 mm) – SAE 9/16	2	Directional Valve to 130 mm Straight Adapter Fitting
55	Hydraulic Hose	Straight × 90° Elbow Hose (L = 1255 mm) – SAE 9/16	2	Directional Valve to 80 mm Straight Adapter Fitting
56	¢ 6 Air Hose	PU6-4---L=1500mm	1	Oil-water separator to Unlock Valve
57	¢ 6 Air Hose	PU6-4---L=5500mm	2	Unlock Valve to Upper and Lower Platforms
58	Lower Floor Hydraulic Hose Fireproof Sleeve	Expanded Length 145----L=2530mm	1	Wrapped Hydraulic Hose for Lower Platform (4090 mm)
59	Upper Floor Hydraulic Hose Fireproof Sleeve	Expanded Length 145----L=2420mm	1	Wrapped Hydraulic Hose for Upper Platform (4000 mm)
60	Hydraulic Hose Fireproof Sleeve	Expanded Length 145----L=300mm	1	Wrapped Hydraulic Hose from Power Unit to Directional Valve (185 mm)

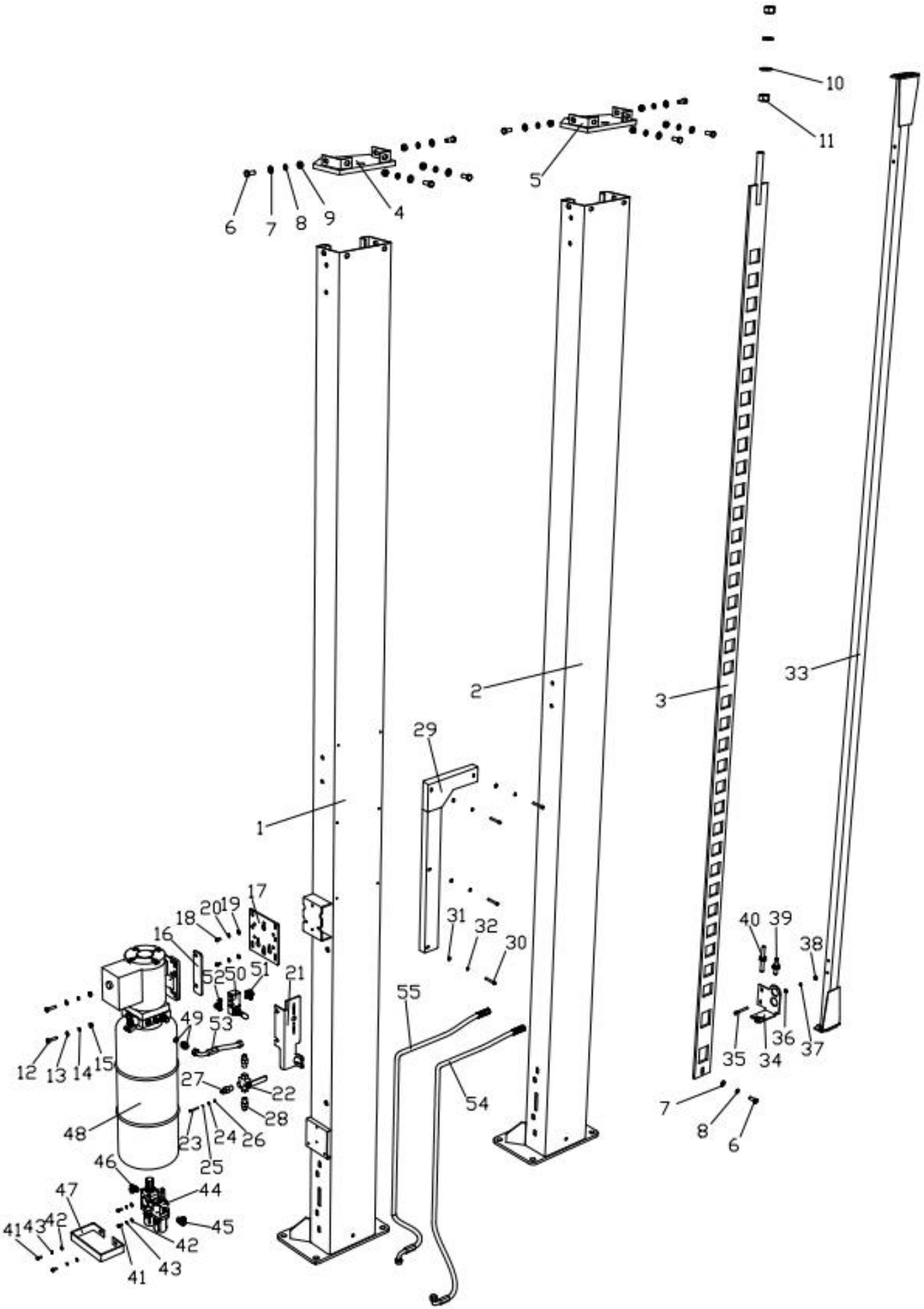
10
11
5
6
7
8
9
4
2
3
33
1
29
31
32
30
55
54
17
18
20
19
16
52
50
51
21
49
53
12
13
14
15
27
22
28
48
23
24
26
25
46
47
44
42
45
41
43
40
39
38
36
35
34
37
7
8
6

4. Lower platform Parts

Lower platform Installation				
Seria 1	Name	Specification	Quantity	Notes (locations)
1	Main Platform	4768-484-120	1	Platform
2	Wheel Stop (Pre-Assembled with Tension Spring)	484-236-5	2	Platform
3	Hook	594-87.5-5	2	Platform
4	Wheel Stop Pin	¢ 16-350/340	2	Platform
5	¢ 16 Circlip	GB/T894-2017	4	Platform
6	Wide Runway Plate	1174-529-115 (With Notch)	4	Platform
7	Wide Runway Plate	1174-529-115	14	Platform
8	Narrow Runway Plate	1016-529-115 (With Notch)	4	Platform
9	Narrow Runway Plate	1016-529-115	14	Platform
10	Hydraulic Cylinder	¢ 75-¢ 28-1790	1	Hydraulic Cylinder
11	Cylinder Rear Shaft	¢ 25-81-65	1	Hydraulic Cylinder
12	R-Type Spring Pin		2	Hydraulic Cylinder
13	Wire Rope Pulling Plate	260-50-8/140-72-20	1	Hydraulic Cylinder
14	Pulling Plate Slider Block	58-30-8	2	Wire Rope Pulling Plate
15	M6－20 Countersunk Bolt	GB 68-85	4	Wire Rope Pulling Plate
16	¢ 6 Flat Washer	GB 95-85-C	4	Wire Rope Pulling Plate
17	¢ 6 Spring Washer	GB 93-87	4	Wire Rope Pulling Plate
18	M6 Nut	GB/T41-86（4.8）	4	Wire Rope Pulling Plate
19	Wire Rope Lock Plate	140-70-5	1	Wire Rope Pulling Plate
20	M24 Self-Locking Nut	GB/T927-88	1	Hydraulic Cylinder
21	6-19+IWRC-ZS-DIN-3060 Steel Wire Rope	L=5232mm-ø9.53	1	Platform
22	6-19+IWRC-ZS-DIN-3060 Steel Wire Rope	L=6915mm-ø9.53	1	Platform
23	6-19+IWRC-ZS-DIN-3060 Steel Wire Rope	L=10203mm-ø9.53	1	Platform
24	6-19+IWRC-ZS-DIN-3060 Steel Wire Rope	L=11886mm-ø9.53	1	Platform
25	M20 Nut	GB/T41-86(4.8)	8	Steel Wire Rope
26	ø20 Flat Washer	GB 96-85-C	8	Steel Wire Rope
27	M10-110mm Socket Set Screw (Cup Point)	GB 80-85	6	Steel Wire Rope Limit Stop
28	Steel Wire Rope Pulley	¢ 178/¢ 32/R5-20	4	Platform
29	Steel Wire Rope Pulley	¢ 148/¢ 32/R5-20	2	Platform
30	Front Cylinder Wire Rope Pulley Shaft – 1 Hole	¢ 32/108-59	1	Steel Wire Rope Pulley
31	Rear Cylinder Wire Rope Pulley Shaft – 1 Hole	¢ 32/108-33	1	Steel Wire Rope Pulley

32	Rear Cylinder Wire Rope Pulley Shaft – 2 Holes	¢32/108-33-42	2	Steel Wire Rope Pulley
33	Wire Rope Pulley Spacer Sleeve	¢50/¢33/-16	1	Steel Wire Rope Pulley
34	Wire Rope Pulley Spacer Sleeve	¢50/¢33/-26	1	Steel Wire Rope Pulley
35	Wire Rope Pulley Spacer Sleeve	¢50/¢33/-42	1	Steel Wire Rope Pulley
36	Wire Rope Pulley Spacer Sleeve	¢50/¢33/-16	2	Steel Wire Rope Pulley
37	Flat Washer	GB 95-85-C	12	Platform Wire Rope Pulley Shaft
38	M8－15 Hex Head Bolt	GB/T5781C（4.8）	4	Platform Wire Rope Pulley Shaft
39	ø8 Flat Washer	GB 96-85-C	4	Platform Wire Rope Pulley Shaft
40	ø8 Spring Washer	GB 93-87	4	Platform Wire Rope Pulley Shaft
41	Grease Nipple		4	Platform Wire Rope Pulley Shaft
42	90 degree ZG3/8 Male–Female Adapter		1	Hydraulic Cylinder
43	ZG3/8 Explosion-Proof Valve		1	Hydraulic Cylinder
44	ZG3/8-9/16 Adapter Fitting		1	Hydraulic Cylinder
45	Hydraulic Hose (L-Type)	L1500- Double Straight 9/16 Male Cone Hydraulic Hose	1	Hydraulic Cylinder
46	Exhaust Silencer		1	Hydraulic Cylinder
47	Black High-Density Polyethylene (HDPE) Nylon Pulley	ø35-ø17-150mm	4	Ramp Roller
48	Galvanized Ramp Roller Pin	¢16-455/445	2	Ramp Roller Pin
49	External Circlip¢16	GB/T894-2017	8	Ramp Roller Pin Limit Stop
50	Ramp Pin	¢16-350/340	4	Ramp Connection
51	Ramp Assembly	872-484-140	2	Platform
52	Platform Fireproof Cloth Bracket		1	Platform
53	M8－25 Hex Head Bolt	GB/T5781C（4.8）	2	Platform Fireproof Cloth Bracket
54	¢8 Flat Washer	GB 95-85-C	4	Platform Fireproof Cloth Bracket
55	¢8 Spring Washer	GB 93-87	2	Platform Fireproof Cloth Bracket
56	M8 Nut	GB/T41-86（4.8）	2	Platform Fireproof Cloth Bracket
57	M12－80 Hex Head Bolt (Partially Threaded)	GB/T5781C（4.8）	8	Platform Cross Beam Connection
58	¢12 Flat Washer	GB 95-85-C	18	Platform Cross Beam Connection
59	¢12 Spring Washer	GB 93-87	8	Platform Cross Beam Connection
60	M12 Nut	GB/T41-86（4.8）	8	Platform Cross Beam

				Connection
61	Secondary Platform Assembly	4768-484-120	1	Platform
62	Air Hose	PU0850	1	Platform

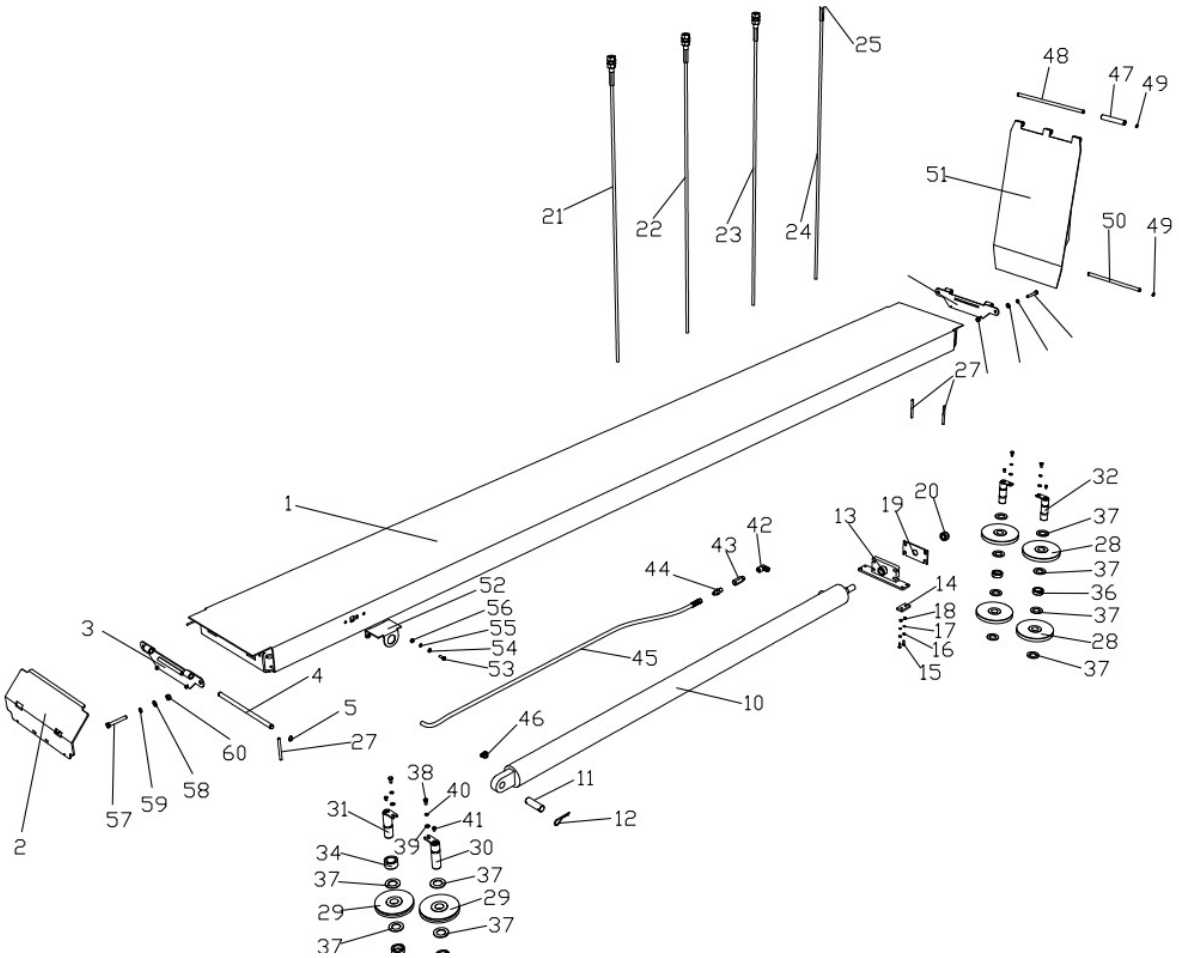

5. Upper platform Parts

Upper platform installation				
Serial	Name	Specification	Q	Notes(location)
1	Main Platform	4768-484-120	1	Platform
2	Wheel Stop (Pre-Assembled with Tension Spring)	484-236-5	2	Platform
3	Hook	594-87.5-5	2	Platform
4	Wheel Stop Pin	¢16-350/340	2	Platform
5	¢16 Circlip	GB/T894-2017	4	Platform
6	Wide Runway Plate	1174-529-115 (With Notch)	2	Platform
7	Wide Runway Plate	1174-529-115	7	Platform
8	Narrow Runway Plate	1016-529-115 (With Notch)	2	Platform
9	Narrow Runway Plate	1016-529-115	7	Platform
10	Hydraulic Cylinder	¢75-¢28-1790	1	Hydraulic Cylinder
11	Cylinder Rear Shaft	¢25-81-65	1	Hydraulic Cylinder
12	R-Type Spring Pin		2	Hydraulic Cylinder
13	Dual-Stage Lifting Bracket Slider Block	201-42-14	2	Dual-Stage Lifting Bracket
14	Dual-Stage Lifting Bracket Wire Rope Pulley	¢148/¢32/R5-36 Double Groove	2	Dual-Stage Lifting Bracket
15	Dual-Stage Lifting Bracket Wire Rope Pulley Shaft	¢32/82-41	2	Dual-Stage Lifting Bracket
16	Dual-Stage Lifting Bracket Wire Rope Pulley Spacer Sleeve	¢50/¢33/-14	4	Dual-Stage Lifting Bracket
17	M10-80mm Socket Set Screw (Cup Point)	GB 80-85	4	Dual-Stage Lifting Bracket Wire Rope Limit Stop
18	M8－15 Hex Head Bolt	GB/T5781C（4.8）	2	Dual-Stage Lifting Bracket Wire Rope Shaft
19	¢8 Flat Washer	GB 95-85-C	2	Dual-Stage Lifting Bracket Wire Rope Shaft
20	¢8 Spring Washer	GB 93-87	2	Dual-Stage Lifting Bracket Wire Rope Shaft
21	M8－15 Countersunk Bolt	GB 68-85	6	Dual-Stage Bracket Slider Block
22	M24 Self-Locking Nut	GB/T927-88	1	Hydraulic Cylinder
23	6-19+IWRC-ZS-DIN-3060 Steel Wire Rope	L=5381mm-Ø9.53	1	Platform
24	6-19+IWRC-ZS-DIN-3060 Steel Wire Rope	L=7064mm-Ø9.53	1	Platform
25	6-19+IWRC-ZS-DIN-3060 Steel Wire Rope	L=10352mm-Ø9.53	1	Platform

26	6-19+IWRC-ZS-DIN-3060 Steel Wire Rope	L=12035mm-Ø9.53	1	Platform
27	M20 Nut	GB/T41-86(4.8)	8	Steel Wire Rope
28	Ø20 Flat Washer	GB 96-85-C	8	Steel Wire Rope
29	M8－45 Hex Head Bolt	GB/T5781C（4.8）	4	Steel Wire Rope Limit Stop
30	₡ 8 Flat Washer	GB 95-85-C	8	Steel Wire Rope Limit Stop
31	₡ 8 Spring Washer	GB 93-87	4	Steel Wire Rope Limit Stop
32	M8 Nut	GB/T41-86（4.8）	4	Steel Wire Rope Limit Stop
33	M10-110mm Socket Set Screw (Cup Point)	GB 80-85	6	Steel Wire Rope Limit Stop
34	Steel Wire Rope Pulley	₡ 178/₡ 32/R5-36 Double Groove	2	Platform
35	Steel Wire Rope Pulley	₡ 148/₡ 32/R5-20	2	Platform
36	Front Cylinder Wire Rope Pulley Shaft – 1 Hole	₡ 32/108-42	1	Steel Wire Rope Pulley
37	Rear Cylinder Wire Rope Pulley Shaft – 1 Hole	₡ 32/108-65	1	Steel Wire Rope Pulley
38	Rear Cylinder Wire Rope Pulley Shaft – 2 Holes	₡ 32/108-53	2	Steel Wire Rope Pulley
39	Wire Rope Pulley Spacer Sleeve	₡ 50/₡ 33/-10	2	Steel Wire Rope Pulley
40	Wire Rope Pulley Spacer Sleeve	₡ 50/₡ 33/-32	2	Steel Wire Rope Pulley
41	Wire Rope Pulley Spacer Sleeve	₡ 50/₡ 33/-13	4	Steel Wire Rope Pulley
42	Flat Washer	GB 95-85-C	8	Platform Wire Rope Pulley Shaft
43	M8－15 Hex Head Bolt	GB/T5781C（4.8）	4	Platform Wire Rope Pulley Shaft
44	Ø8 Flat Washer	GB 96-85-C	4	Platform Wire Rope Pulley Shaft
45	Ø8 Spring Washer	GB 93-87	4	Platform Wire Rope Pulley Shaft
46	Grease Nipple		6	Platform Wire Rope Pulley Shaft
47	90 degree ZG3/8 Male–Female Adapter		1	Hydraulic Cylinder
48	ZG3/8 Thread Explosion-Proof Valve		1	Hydraulic Cylinder
49	ZG3/8-9/16 Adapter Fitting		1	Hydraulic Cylinder
50	L-Type Hydraulic Hose	L1300-9/16 Male Cone Hydraulic Hose	1	Hydraulic Cylinder
51	Exhaust Silencer		1	Hydraulic Cylinder
52	Black High-Density Polyethylene (HDPE) Nylon Pulley	Ø35-Ø17-150mm	4	Ramp Roller
53	Galvanized Ramp Roller Pin	₡ 16-455/445	2	Ramp Roller Pin
54	₡ 16 External Circlip	GB/T894-2017	8	Ramp Roller Pin Limit Stop
55	Ramp Pin	₡ 16-350/340	4	Ramp Connection
56	Ramp Assembly	1292-484-281	2	Platform

57	Platform Fireproof Cloth Bracket		1	Platform
58	M8－25 Hex Head Bolt	GB/T5781C（4.8）	2	Platform Fireproof Cloth Bracket
59	¢ 8 Flat Washer	GB 95-85-C	4	Platform Fireproof Cloth Bracket
60	¢ 8 Spring Washer	GB 93-87	2	Platform Fireproof Cloth Bracket
61	M8 Nut	GB/T41-86（4.8）	2	Platform Fireproof Cloth Bracket
62	M12－80 Hex Head Bolt (Partially Threaded)	GB/T5781C（4.8）	8	Platform Cross Beam Connection
63	¢ 12 Flat Washer	GB 95-85-C	18	Platform Cross Beam Connection
64	¢ 12 Spring Washer	GB 93-87	8	Platform Cross Beam Connection
65	M12 Nut	GB/T41-86（4.8）	8	Platform Cross Beam Connection
66	Dual-Stage Lifting Bracket		1	
67	Secondary Platform Assembly	4768-484-120	1	Platform
68	¢ 6 Air Hose Tee Fitting	YPE-6	1	
69	¢ 6 Air Hose Straight Fitting	YPU-6	1	
70	Air Hose	PU0850	1	Platform

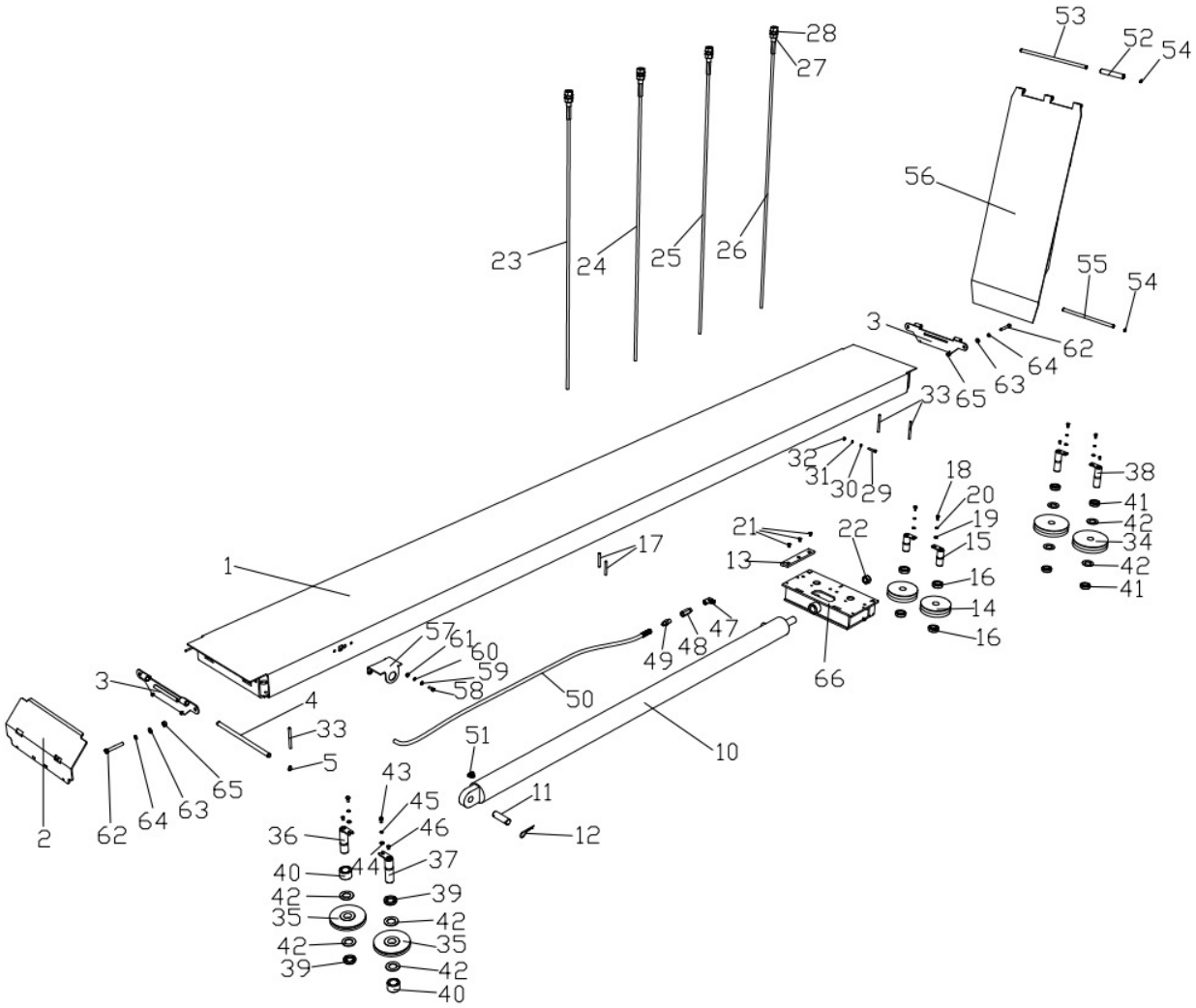
1
2
3
4
5
10
11
12
13
15
16
17
18
19
20
21
22
23
24
25
26
27
28
30
31
32
33
34
35
36
37
38
39
40
41
42
43
44
45
46
47
48
49
50
51
52
53
54
55
56
57
58
59
60
61
62
63
64
65
66